# Operating Manual

for

## Reclining Bathtub AVERO Motion

**Part No. 810150550**

## Reclining Bathtub AVERO Motion E

**Part No. 910150540**
**(incl. hand control)**



Illustration shows
**AVERO Motion**
Part. No. 810150550

Edition V 1.3 EN
Technical Changes reserved
14.07.2014

# Contents

**1. Preface ..... 3**

**2. Introduction ..... 4**

2.1 Intended Use ..... 4
2.2 Duration of treatment ..... 4
2.3 Typical indications ..... 4
2.4 Contraindications ..... 5
2.5 Safety Risk and possible Device Damage ..... 5

**3. Safety instructions ..... 6**

**4. Control elements reclining bathtub AVERO Motion ..... 9**

4.1 11-key keypad AVERO Motion ..... 9
4.2 10-key hand control AVERO Motion E ..... 10
4.3 Assemblies Reclining bathtub AVERO Motion ..... 11
4.4 Tub fitting with hand shower ..... 12

**5. Installation ..... 13**

5.1 Note before the first start-up ..... 13
5.2 Electrical system ..... 14

**6. Operation of reclining bathtub AVERO Motion ..... 15**

6.1 Operation control of reclining bathtub AVERO Motion ..... 16
6.2 Opening the door of the reclining bathtub AVERO Motion ..... 19
6.3 Closing the door of the reclining bathtub AVERO Motion ..... 20
6.4 Changing the disinfectant container ..... 21
6.5 Music sound system ..... 22

**7. Cleaning / Disinfection ..... 24**

7.1 Cleaning the reclining bathtub AVERO Motion ..... 24
7.2 Disinfecting the reclining bathtub AVERO Motion ..... 24
7.3 Adjustable disinfectant admixture ..... 26
7.4 Sterilisation ..... 27
7.5 Contact person for technical information ..... 27

**8. Disposal ..... 28**

8.1 Disposal of the packaging material ..... 28
8.2 Product disposal ..... 28

**9. Safety Check ..... 29**

**10. Troubleshooting and Customer Support ..... 30**

10.1 Troubleshooting ..... 30
10.2 Customer service ..... 31

**11. Appendix ..... 32**

11.1 Technical data ..... 32
11.2 Dimensions ..... 34
11.3 Icons and Symbols used ..... 35
11.4 Declaration of conformity ..... 36
11.5 Additional equipment / Accessories AVERO Motion and AVERO Motion E ..... 36

**12. Installation instructions ..... 37**

12.1 Change hand shower ..... 37
12.2 Change hand shower hose ..... 37
12.3 Change hand shower holder ..... 38
12.4 Change disinfecting hand shower ..... 38
12.5 Change disinfecting hand shower hose ..... 39
12.6 Change excenter fitting (drain) ..... 40
12.7 Thermostatic mixer calibrate / adjust ..... 41

# 1. Preface

Dear Customer,

thank you for purchasing a medical product from BEKA Hospitec GmbH. Please consider the following points:

1. Please read the enclosed instruction manuals carefully.
2. Use this device for its intended purpose only.
3. Operating this device is only admissible through instructed and trained personnel.
4. Electrical installations may only be done by specialist companies according to the currently valid VDE regulations.
5. Maintenance and safety checks are only permitted to be carried out by BEKA Hospitec or by companies authorised by BEKA Hospitec.
6. Installations, upgrades, changes or repairs are only permitted to be carried out by BEKA Hospitec or by companies authorised by BEKA Hospitec.
   In case technical interventions such as amendments or changes to our devices are not made or carried out by BEKA Hospitec or by companies authorised by BEKA Hospitec, all warranties for the changes as well as for the device or device functionalities connected with these changes, shall expire immediately.

## Liability and warranty

The manufacturer of the device shall only be responsible for the safety and reliability of the device if:

**a.** the installation or assembly has been done by authorised persons,
**b.** the respective space corresponds to the current VDE guidelines and has been maintained as such,
**c.** the device is used for its intended purpose,
**d.** functionality checks are carried out on a regular basis.

# 2. Introduction

## 2.1 Intended Use

The reclining bathtub AVERO Motion is intended to be used to bathing and nursing patients in hospitals and nursing homes as well as nursing facilities.
Through its height adjustment the reclining bathtub AVERO Motion helps in simplifying the care given to the patient.

## 2.2 Duration of treatment

The duration of one treatment unit with the reclining bathtub AVERO Motion is specified as maximum **30 minutes**.

***Please note***
Side effects through treatments are not known.
Please pay attention to the contraindications in section 2.4.

## 2.3 Typical indications

For bathing and nursing of patients in hospitals and nursing homes as well as nursing facilities.

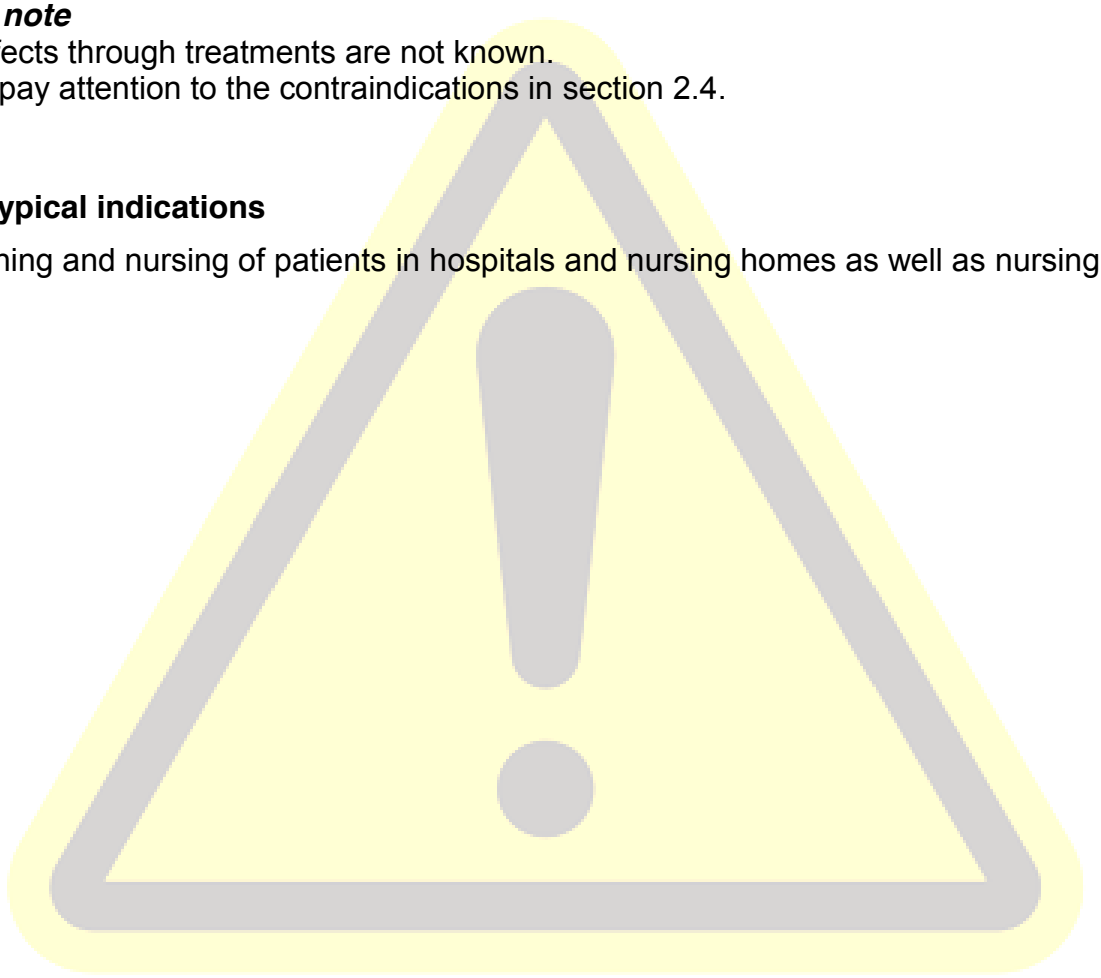

## 2.4 Contraindications

Pregnant women should not be treated with the reclining bathtub AVERO Motion.

**WARNING:**



Patients with:
- Cardiac insufficiency,
- Cardiovascular diseases,
- Intracranial injury,
- Open wounds,
- Supply or discharge pipes (e.g. catheters, drainages),
- Tumours in the treatment area

may be treated with the reclining bathtub AVERO Motion after consulting the physician in charge.

## 2.5 Safety Risk and possible Device Damage

**WARNING:**



Patients with active implants like infusion or insulin pumps as well as patients with feverish conditions, inflammatory skin diseases and AIDS may **not** be treated with the reclining bathtub AVERO Motion. A warning sign should be placed well visible in the approach area to the treatment room.

Please observe the safety instructions provided in the following paragraph.

# 3. Safety instructions

Please read the following safety instructions before using the reclining bathtub AVERO Motion for the first time. All notes and warnings on the device and in these operating instructions must be absolutely observed.

The manufacturer BEKA Hospitec GmbH shall not be liable for any errors or damage caused by improper use.

- **Operating instructions**

Please read the safety and operating instructions before using the reclining bathtub AVERO Motion for the first time. Please keep these operating instructions near the device for later use.

- The product is only permitted to be deployed and operated by trained personnel.
- Before each use, check that all parts are undamaged; in case parts are damaged, the tub may **not** be used.
- The water temperature must be checked every time before using.
- After each application the product has to be disinfected.
- Always make sure that your feet are located next to the tub before and during the height adjustment.
- During the height and tilt adjustment of the tub feet shall not be placed on the foot stand.
- The operator must make sure that nothing is in the area under and above the tub which could impede free up and down movement of the tub.
- The bath tub must only be used for its intended purpose.
- Make sure that the power supply is always switched on during the treatment.
- Before each use of the device, the user has to make sure all functions are safe to use and the device work as intended (e.g. visual checks, functionalities, etc.).
- Every month the pressure hoses must be checked for leakages, the connections for secure fitting as well as the electrical connections for cracks in the cables.
- Devices that are used together with the electrical-medical bathing devices (e.g. devices for administering underwater massages, device for circulation, patient lifting devices) must conform to the guidelines for protection against the risk of an electrical shock according to the standard E VDE 0750 Part 224.
- The device is not approved to be used in explosion-prone areas.
- Treatment must only be carried out under supervision.
- The patient must always take a seated position in the tub.
- The entry and exit from the tub is only allowed in the initial position.
- The patient needs to use the hand holds for getting in and out. of the tub.
- In order to avoid getting caught, the hands, arms, legs, feet and hair of the patient must lie close to the body.
- If you are not using the reclining bathtub AVERO Motion, leave the door slightly open so that the seal lasts longer.
- The nursing staff must protect the skin and the eyes against concentrated disinfection and cleaning agents. **Pay attention to the operating instructions for the disinfectant used.**

- **Control unit**
  The control unit may only be operated by trained and instructed personnel.
- **Power supply connection**
  The electrical connection must be performed by an authorized electrician. The current local requirements must be observed.
- **EMC**
  A simultaneous use of short-wave or microwave therapy devices in the immediate vicinity is not permitted, in order to prevent an electromagnetic influencing (EMC) of the control unit. Mobile phone can also cause an influence.
- **Ventilation**
  Please never cover, stick something over or alter slots and openings on the device.
- **Cable routing**



Lay the power and the connection cords in such a way that they cannot be damaged. A damaged power cord can cause a fire or risk of electric shock and may not be used.

- **Customer service**
  In case the device is not working correctly anymore and if no measures described in section 10.1 help, detach the device form the power supply and get in touch with the customer support of your BEKA sales partner or the manufacturer:

**BEKA Hospitec GmbH**
Am Rübenmorgen 3 ● 35582 Wetzlar
Phone: +49(0)641-9 22 20 - 0
Fax: +49(0)641-9 22 20 - 20
info@beka-hospitec.de
www.beka-hospitec.de

**CAUTION:**
Do not operate or store any devices that can be influenced by moisture near the reclining bathtub AVERO Motion.

- **Electric motor**
  The electric motor is equipped with an overload protection, which cuts off automatically at overload. Only after a short delay (10-20 minutes) the electric motor is ready for use again. **Opening the motor will result in that the warranty expires along with all liability claims.**
- **Cleaning**
  To clean the reclining bathtub AVERO Motion please do not use any aerosol cleaners. You will find instructions on how to clean and disinfect the device in section 7.
- **Repair**
  Repairing parts of the reclining bathtub AVERO Motion is only permitted to be carried out by trained professional personnel. Please always get in touch with your customer service. **Opening the device or the accessories will result in that the warranty expires along with all liability claims.**

- **Duty of care**
  Before use make sure that the system is in a proper state and that all functions are safe to use. Please never insert any foreign body into the device. This amounts to a safety risk and cause a life-threatening electrical shock or damages in the device.
- **Safety checks**
  A "Safety Checks" (SC) needs to be carried out with the reclining bathtub AVERO Motion in intervals of 12 months in connection with maintenance work. For intervals please see section 9.
- **Accessories**
  Please operate the reclining bathtub AVERO Motion with original accessories only.

**WARNING:**



Any unauthorized repair, rebuildings and changes are forbidden for safety reasons and exclude a liability of the manufacturer for the damages resulting from it.
For the damages which result from the use of spare parts not released by the manufacturers or accessories every other liability of the manufacturer is excluded.

# 4. Control elements reclining bathtub AVERO Motion

## 4.1 11-key keypad AVERO Motion




| | | | |
|---|---|---|---|
| 1 | Button height adjustment **Up** | 9 | Button disinfection |
| 2 | Button height adjustment **Down** | 10 | Power supply LED |
| 3 | Button air spa system | 11 | Button hand shower |
| 4 | Button blower **+** | 12 | Button filling |
| 5 | Tilt adjustment **Up** | 13 | Display bath water temperature |
| 6 | Tilt adjustment **Down** | 14 | Display hand shower temperature |
| 7 | Button coloured light therapy system | 15 | Display filling temperature |
| 8 | Button blower **-** | 16 | - |

## 4.2 10-key hand control AVERO Motion E




| | |
|---|---|
| 1 | Button filling |
| 2 | Button hand shower |
| 3 | Button height adjustment **Up** |
| 4 | Tilt adjustment **Up** |
| 5 | Button height adjustment **down** |
| 6 | Tilt adjustment **down** |
| 7 | Button air spa system |
| 8 | Button coloured light therapy system |
| 9 | Button blower **+** |
| 10 | Button blower **-** |

## 4.3 Assemblies Reclining bathtub AVERO Motion

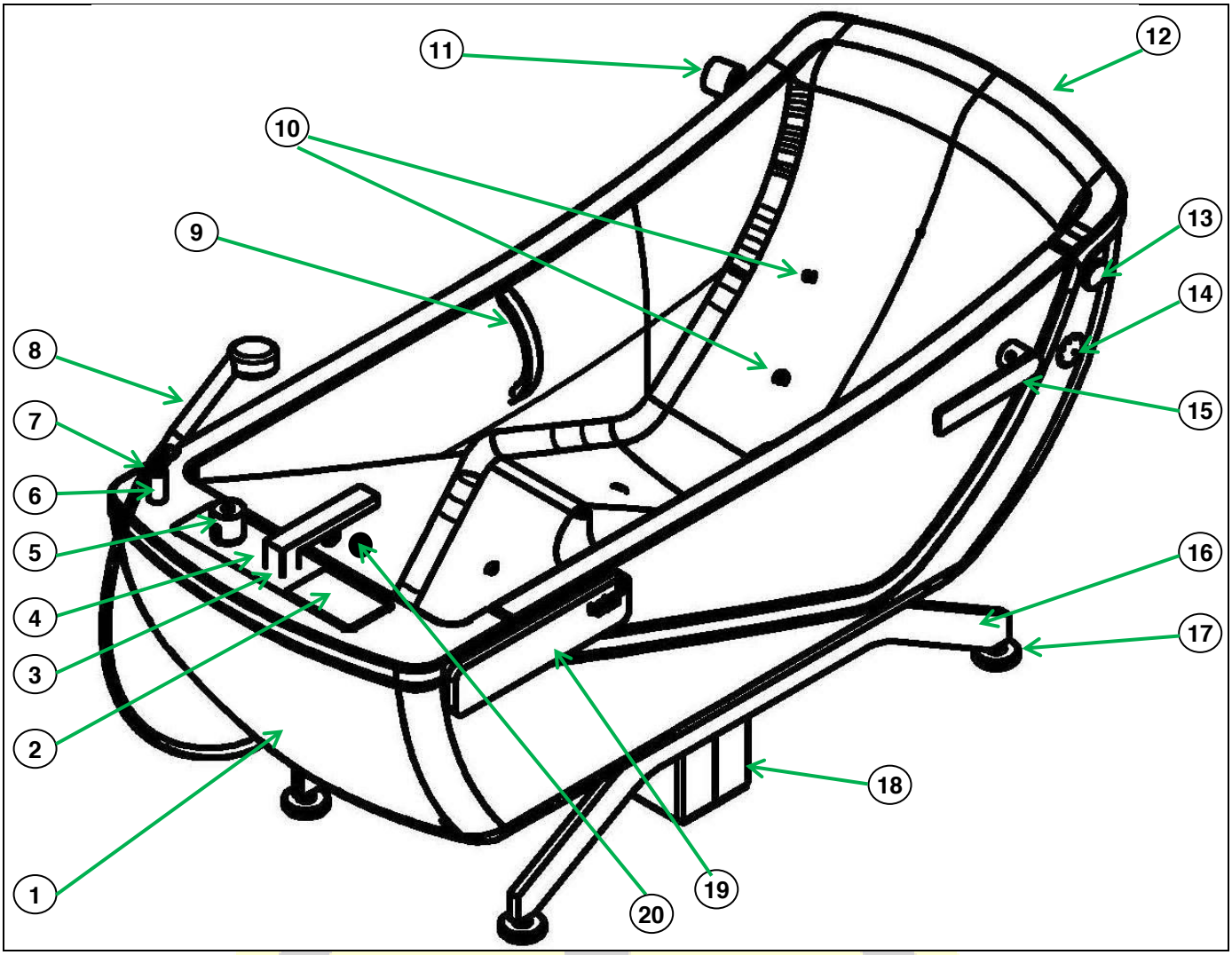


| Pos. No. | Description | Pos. No. | Description |
|---|---|---|---|
| 1 | Inspection opening, water conducting components | 11 | Disinfectant hand shower |
| 2 | Keypad | 12 | Inspection opening, electrical components |
| 3 | Fitting | 13 | MP3 docking station |
| 4 | Base plate for control elements | 14 | Aroma therapy |
| 5 | Turning handle cylinder with groove for thermostat | 15 | Door handle with safety locking |
| 6 | Ball-joint wall holder of hand shower | 16 | Foot stand |
| 7 | Hand shower hose | 17 | Machine base |
| 8 | Hand shower | 18 | Disinfectant compartment |
| 9 | Hand grip (1x left, 1x right) | 19 | Frame for door hinge |
| 10 | Air nozzles | 20 | Coloured light therapy system |

## 4.4 Tub fitting with hand shower



**Picture 1:**
The picture shows the control unit and the hand shower of the reclining bathtub AVERO Motion.



**Picture 2:**
The picture shows the fittings and the hand shower of the reclining bathtub AVERO Motion **E**.

**Picture 3:**
The picture shows the disinfecting hand shower with locking function of the reclining bathtub AVERO Motion.

**ONLY FOR CANADA**





**Picture 4:**
The Picture shows the disinfecting hand shower of the reclining bathtub AVERO Motion.

**ONLY FOR EUROPE**

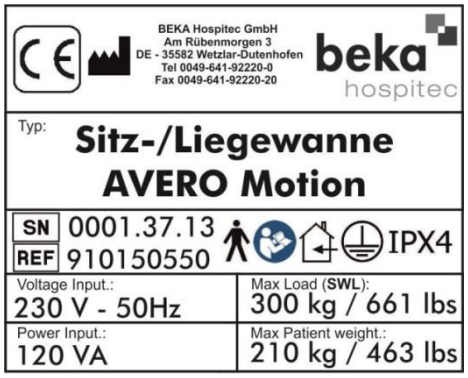


**Picture 5:**
The picture shows the type label.
The type label is present as shown in picture 1, page 13 at the rear side of the console.
The serial number (**SN**) 0001.37.13 shown here is an example. If you have any questions, please always refer to the serial number of the unit on the type label.

# 5. Installation

Dear Customer,

- Please have your electrical installation checked according to the valid VDE regulations 0100 and 0750th before using our equipment.
- As the operator of this system, you must regularly get checked the function of the ground fault interrupter. Please ask your local electrician.
- These checks are necessary for the safety of your patients and for your own safety.
- The device is not approved to be used in explosion-prone areas.
- This device is only intended for use in medical rooms (according to VDE 0100).
- Repairs are only permitted to be carried out by BEKA Hospitec or by companies authorised by BEKA Hospitec. Otherwise all warranties for the changes as well as for the device or device functionalities connected with these changes, shall expire immediately.
- The water-side connection of the AVERO Motion must comply with the technical drawings of the BEKA Hospitec and the Guidelines for the establishment of wet areas and the current VDE standards.
- All inlet and outlet hoses must be routed so that there is no danger of stumbling.
- Before installing the tub, the water connections must be adequately rinsed.

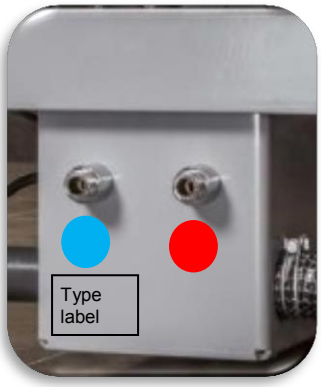


**Picture 1:**
The picture shows the water connections of the reclining bathtub AVERO Motion.

= cold water

= hot water

## 5.1 Note before the first start-up

**WARNING:**



The device may be used only in accordance with the accompanying papers.

Only under these conditions, the manufacturer considers responsible of the effect on the safety, reliability and performance of the device.

If the reclining bathtub AVERO Motion will be reconnected, the specifications must be observed.

**WARNING:**



**To prevent scalding, the hot / cold water mixing device must be calibrated before initial commissioning, according to the on-site water supply / set. It must be prepared a calibration plan by the responsible person (see chapter 12.7).**

**NOTICE:**



**In order to ensure reliable functioning and safe operation, we recommend regular maintenance with calibration of the thermostat mixer. This must be done by a qualified technician. Putting up the AVERO Motion tub in another room or changes to the local water supply may require a recalibration of the thermostatic mixer.**

## 5.2 Electrical system

**Connection to the power supply network:**

When connecting the device to a power supply network the specific national provisions must be observed (eg in Germany DIN VDE 0100-710).

The AVERO Motion is connected by means of a distribution box IP X4, 230 V AC/50 Hz, 3x1.5 mm², 1.5 KW, 16 ampere, FI-safety switch 30 mA potential equalisation according to DIN VDE 0107.

**Please note that the connection must be performed by a qualified electrician.**

**Earth wire:**
When using devices of protection class I, the quality of the protective conductor of the installation is important. It is important to ensure that, in many countries by national authorities requirements are specified.

# 6. Operation of reclining bathtub AVERO Motion

The reclining bathtub AVERO Motion is free on all sides and has a low space requirement.

If you want to fill the reclining bathtub AVERO Motion, press the button "**12**" on the control to fill the bath tub. The filling stops automatically when the water reaches the desired level. **(This feature is included only in case of the option "Automatic water stop").**

Wheelchair patients can be seated easily in the reclining bathtub AVERO Motion by means of mobile lift systems.
The free space below the bath tub allows the direct access with nearly every lift system.

The patient has a better sitting position through the integrated sitting function in the tub. Two handholds are provided in the bath tub for a higher safety.
Press the buttons **Up** or **Down** to raise or lower the bath tub so that the patient can be brought in the desired position. You can release the button when the desired position is attained.
Moreover, the reclining bathtub AVERO Motion has an tilt function. This tilt function can be used by the pictograms.
Once the bathing is completed, rotate the excenter button (overrun), in order to drain out the water.
You can already begin to dry the patient's upper body while he is still sitting comfortably in the bathtub.
Help your patient now to come out of the bath tub or use a lift system to seat him in his wheelchair.

Make sure that the bath tub is always disinfected and rinsed before you use it for the next patient.

To do this, use the integrated disinfection **(optional)**, with which your reclining bathtub AVERO Motion is additionally equipped.




The picture shows the direction of movement for opening and closing the excenter button (overrun).

## 6.1 Operation control of reclining bathtub AVERO Motion

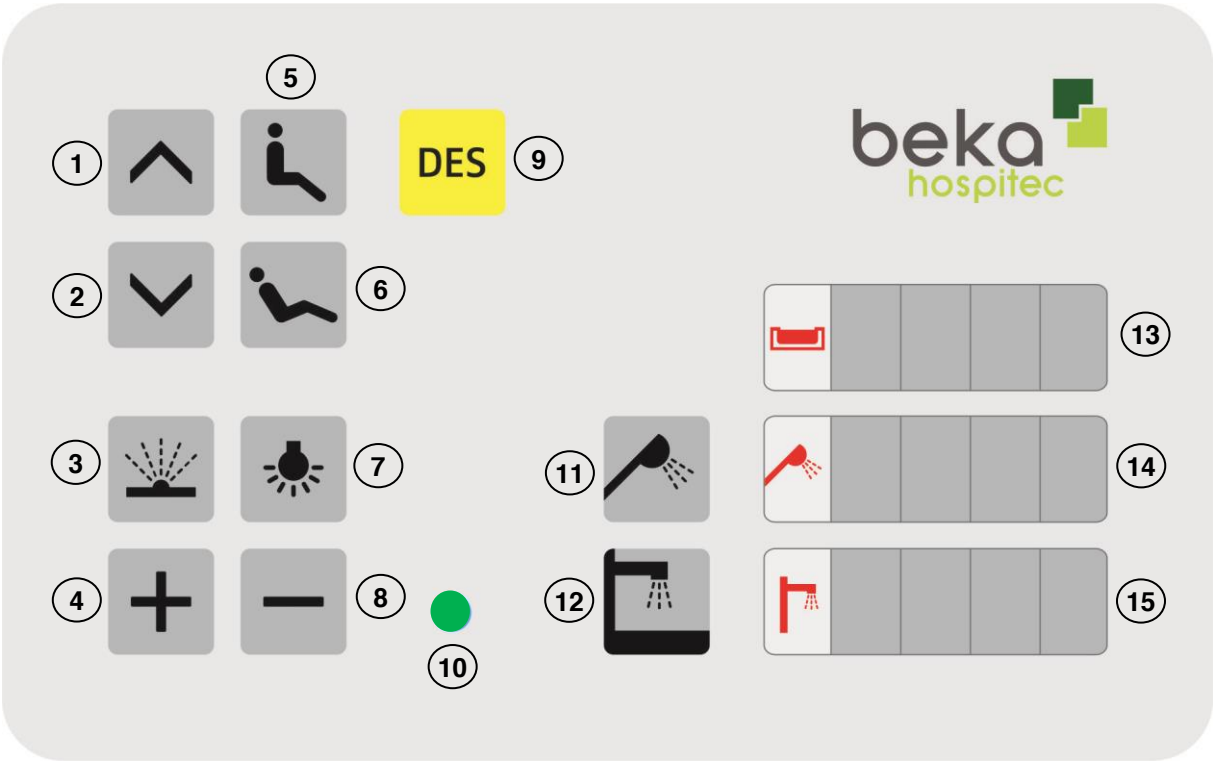


| | | | |
|---|---|---|---|
| 1 | Button height adjustment **Up** | 9 | Button Disinfection |
| 2 | Button height adjustment **Down** | 10 | Power supply LED |
| 3 | Button air spa system | 11 | Button Hand shower |
| 4 | Button blower **+** | 12 | Button Filling |
| 5 | Tilt adjustment **Up** | 13 | Display Bath water temperature |
| 6 | Tilt adjustment **Down** | 14 | Display Hand shower temperature |
| 7 | Button coloured light therapy system | 15 | Display Filling temperature |
| 8 | Button blower **-** | 16 | - |

After a power reset, the control variant is displayed for about 1.5 seconds (display 3 (13)). For this control panel is "not" shown for AVERO Motion.
If the control panel is faulty, "Err" is displayed. The control then can no longer operate. The control panel must be replaced.
After displaying the control variant the setting of temperatures for the scald is displayed for about 1.5 seconds.
On display 3 (13) is "hot" is displayed, on display 1 (14), the set temperature of the scald for the hand shower (42 ° C or 45 ° C) is indicated, the display 2 (15), the set temperature of the scald protection for the water supply (42 ° C or 45 ° C) is displayed.

### (1) + (2) Height adjustment Up / Down

Use the "Up" and "Down" buttons for adjusting the height individually. If the button "Up" is pressed the tub moves upwards. If the button "Down" is pressed the tub is moves down.

### (3) Button air spa system

The air spa system (blower) can be switched on / off via the button (3). The blower is switched off automatically 30 minutes after the button is pressed the last time or when the water sensor reports to the blower that there is no water in the tub (sensor is no longer covered).

If the water sensor was covered with water for at least 1 minute, the automatic drying is started after 3 minutes. The automatic drying lasts for 30 seconds and can be interrupted with the button (3).

**Manual drying of the air spa system**
After emptying the tub, the drying of the system can be done manually at any time. Press the button (3) to start or stop the manual drying. The manual drying of the system lasts for 30 seconds. No automatic drying of the system takes place after the manual drying is done.

**Automatic drying of the air spa system**
After emptying the tub, the LED changes from continuous glowing to 5-second interval mode and the drying of the air spa system takes place. This process starts automatically after approx. 3 minutes and needs no intervention by the operator. The automatic drying of the system lasts for 30 seconds and can be interrupted by pressing the button (3).

**(4 + 8) Button blower +/-**
The blower power can be adjusted manually with the buttons +/-. Press the buttons + and - together to start the blower modulation.

**(5) + (6) Tilt adjustment up / down**
Via the "Tilt Up" and "Tilt Down" buttons the tilt of the tub can be adjusted individually.
If the "Tilt UP" button is pressed the tilt of the tub will be reduced. If the "Tilt Down" button is pressed, the tilt increases.

***The tilt and height adjustment can not be operated simultaneously.***

**(7) Button coloured light therapy system**
Press the button (7) to switch on the coloured light therapy system. The LED spotlight (with RGB colours) glows (1-4 piece). The further available colours can be selected by pressing the button (7) again. The sequence of the colours is as follows: Red - yellow - green - blue - automatic colour selection.
It is possible to stop the automatic colour change by pressing the button (7) again. Pressing the button (7) again starts the colour change. Press the button (7) for at least 3 seconds to switch off the colour light therapy.

**(9) Button disinfection**
The button disinfection switches on / off the disinfection unit.
Press 1x to switch on the disinfection, press the button again to switch off the disinfection.
The disinfection unit can be switched on only when the tub is emptied and all other functions are switched off. These are e.g. the functions of blower, light, hand shower and filling. A disinfection procedure must be carried out for at least 15 seconds, else the system assumes an incorrect operation. The disinfection can be started by pressing the DES button (9). The power indicator (10) shows the activation of disinfection by lit up continuously.
The disinfection is ended manually by pressing the DES-button (9), or automatically after 3 minutes. It then starts the application time.
Depending upon the setting, the application time lasts for 5, 8 or 10 minutes (see Dip-switch). All functions are released again after expiry of the application time.
To interrupt the application time (blocking of further functions), press the disinfection button for 5 seconds.
The height adjustment of the tub is not affected by the blocking and continues to remain in operation.

**(10) Power indicator**
The power indicator indicates by flashing at 5 second intervals that power is applied and the AVERO Motion is ready.

**(14) Display 1 / (15) Display 2 / (13) Display 3**
The following are shown via the built-in digital displays:
Display 1 = Hand shower temperature
Display 2 = Fill temperature
Display 3 = Bath water temperature
The display is done in steps of 0.5°. The display can be done in °C or °F.
If the measured temperature is greater than 42 °C or 45 °C, the corresponding display then shows "HOT" alternately with the temperature.
The temperature is shown in the range of 2.5 °C (32.5 °F) to 64.0 °C (99.5 °F). "tLO" is shown, if the temperature is less than 2.5 °C. "tHI" is shown, if the temperature is greater than 64.0°C.

**(11) Button hand shower**
The built-in hand shower is switched on / off via the button (11).
The hand shower is switched off automatically, when the hand shower temperature is greater than 42 °C or 45 °C (display alternates with "HOT" scalding protection).
If the scalding protection is active (temperature display alternates with "HOT"), the hand shower can then no longer be switched on with the button (11). The hand shower can then be switched on / off with the following button combinations: Keep the button (11) pressed, then press the buttons (3) and (7) together in addition.
The hand shower can always be switched off (even with active scalding protection) with the button (11).

**(12) Buttons filling height (automatic water stop)**
One filling height has been defined for filling the tub. By pressing the button (12) the filling of the tub starts till the defined filling height 1. Discontinuation of filling up to the level 1 is achieved by pressing the button (12) again.
Press (after reaching the fill height 1) the button (12), in order to fill the tub further manually. The filling then continues indefinitely till the button (12) is pressed again.
The tub filling is switched off automatically, when the fill temperature is higher than 42 °C (display alternates with "HOT" scalding protection).
If the scalding protection is active (temperature display alternates with "HOT"), the tub filling can then no longer be switched on with the button (12). The tub filling can then be switched on / off with the following button combinations: Keep the button (12) pressed, then press the buttons (3) and (7) together in addition.
The tub filling can always be switched off (even with active scalding protection) with the button (12).

**(12) Buttons Filling / Fill height (manual filling)**
By pressing the button (12) the manual filling of the tub starts till the desired fill height (**Caution:** the filling continues indefinitely). The filling can be terminated till the desired fill height by pressing the button (12) again.
Important is that by manual filling of the tub, the water line not exceed 1 cm under the bottom edge of the overlow.
After the patient / resident has been seated in the tub and the door has been locked correctly, the manual filling can be continued again by pressing the button 12. The filling then goes on indefinitely, till the button (12) is pressed again. The tub filling is switched off automatically, when the fill temperature is higher than 42 °C (display alternates with "HOT" scalding protection).
**Caution:** The manual filling must only be carried out under supervision.

## 6.2 Opening the door of the reclining bathtub AVERO Motion



**Picture 1:**
The picture shows the door handle in the closed position.

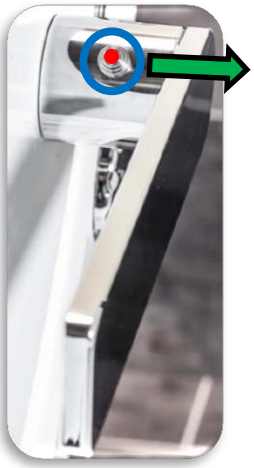

**Picture 2:**
The picture shows the process of opening the door lock.
For opening the door you must at first pull the safety lock (**red button**) in the direction of movement (**green**), thereafter you can move the door handle downward by pressing it.
**Please note the following pictures for opening the door.**

**Picture 3:**
The picture shows the direction of movement for opening the door.





**Picture 4:**
The picture shows the direction of movement for opening the door.

**Picture 5:**
The image shows the door handle in the open position. The door can be opened in this position.





**Picture 6:**
You can now open the door of AVERO Motion.

## 6.3 Closing the door of the reclining bathtub AVERO Motion



**Picture 1:**
Pull the door till about approx. 15 cm before the lock and check the position of the lock.
In case the door handle is not in this position, as you can see in the picture beside, bring it in the desired position **(Section 6.2).**




**Picture 2:**
The picture shows the door handle and the lock in the **incorrect** position.
The lock is fully extended. The door of AVERO Motion cannot be closed like this.

**Caution Risk of injury!**

**Picture 3:**
The picture shows the **correct** position for locking the door of AVERO Motion.





**Picture 4:**
The picture shows the door in the end position for locking the door with the handle.

**Picture 5:**
Press with one hand lightly from above on the body of the door and with the other hand move the door handle in a clockwise manner.





**Picture 6:**
Move the door handle till you reach the end position, as shown in the picture here. The end position is reached when you hear the snap **(click)** sound.

## 6.4 Changing the disinfectant container

**Picture 1:**
Move the tub so far upward that you can approach the cover of the disinfectant without any problems.





**Picture 2:**
Insert now the key in the square and rotate this in a anti-clockwise manner, in order to open the lock.

**Picture 3:**
Remove now the cover of the disinfectant compartment by pulling at the black button.





**Picture 4:**
You can now take out the disinfectant tank, in order to fill it.

**WARNING:**



The tank with the disinfectant is accessible through the cover at the foot stand of AVERO Motion and is locked for the safety of the patient. Always remove the key and store it in a safe place. When refilling and replacing the tank make sure that the suction hose reaches the bottom of the tank. Then close off the inspection door with the key.

## 6.5 Music sound system

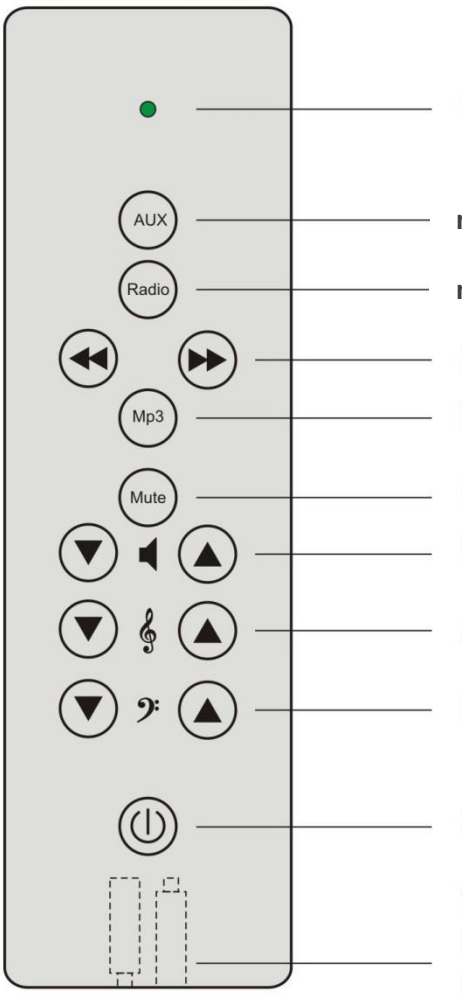


LED (green) signals when keys are pressed

**not used / no function**

**not used / no function**

MP3-track and/or radio station backward/foreward

MP3 source, start and standby

Mute - muting

Volume -/+

Altitude -/+

Bass -/+

On/Off key (Standby)

The power supply of the remote control is supplied by 2 x 1,5 V AA standard batteries. The battery case can be opend/closed e.g. with a coin.
Please observe the symbols by insertion of the batteries.

### *Music-Sound system AVERO*

The music-sound system AVERO is controlled by the remote control included in the delivery. The USB-Stick is inserted into the MP3-docking station. Remove the cover to insert the USB-Stick. The cover of the docking station must be readjusted after insertion of the USB-sticks. The music files are now automatically recognized.

Start the Music-Soundsystem with the key ⏻ . With the key Mp3 source Mp3 the play back is started.
With the keys ⏪ ⏩ the track jump can be activated.
For muting the play back, press the key Mute The muting function can be exited by pressing the key Mute or. Mp3

The volume and adjustment of the altitude and bass, can be activated by pressing the keys ▼ 🔈 ▲ for volume, ▼ 𝄞 ▲ for the altitude and ▼ 𝄢 ▲ for the bass.

The music-sound system should be turned off withthe key ⏻ , when the tub is exited.

| Erläuterung Musik-Soundsystem | Explanation music sound system |
|---|---|
| LED (grün) leuchtet bei Tastenbetätigung | LED lights when the key is pressed |
| MP3-Titel und/oder Radiosender zurück/vor | previous/next MP3 title and/or radio station |
| MP3 Quelle wählen, abspielen und pause | Select, play and pause MP3 source |
| Mute – Stummschaltung | Muting |
| Lautstärke -/+ | Volume -/+ |
| Höhen -/+ | Treble -/+ |
| Bässe -/+ | Bass -/+ |
| Einschalttaste an/aus (Standby) | Power switch on/off (standby) |
| Die Stromversorgung der Funkfernbedienung erfolgt über 2 x 1.5 V AA Standardbatterien. Das Batteriefach kann mit z. B. einer Münze geöffnet bzw. geschlossen werden. Bitte beachten Sie die Symbolik beim Einsetzen der Batterien. | Power is supplied to the hand control via 2 x 1.5 V AA standard batteries. The battery compartment can be opened / closed with a coin. Please pay attention to the symbols while inserting the batteries. |
| Musik-Soundsystem | Music sound system |
| Das Musik-Soundsystem wird über die mitgelieferte Funkfernbedinung bedient. | The music sound system is operated via the accompanying hand control. |
| Der USB-Stick wird in die MP3-Dockingstation eingesteckt. | The USB stick is inserted in the MP3 docking station. |
| Entfernen Sie den Deckel, um den USB-Stick einzustecken. | Remove the cover for inserting the USB stick. |
| Der Deckel der Dockingstation muss nach dem Einstecken des USB-Sticks wieder verschlossen werden. | The cover of the docking station must be closed again after inserting the USB stick. |
| Die Musikdateien werden nun automatisch erkannt. | The music files are now detected automatically. |
| Schalten Sie das Musik-Soundsystem über die Einschalttaste ⏻ ein. | Switch on the music sound system via power button ⏻. |
| Über die Taste MP3-Quelle wird die Wiedergabe gestartet. | The playback is started via the button MP3 source. |
| Mit den Tasten ⏮⏭ kann der Titelsprung zurück- und vorgenommen werden. | With the buttons ⏮⏭ one can jump to the previous and the next titles. |
| Um die Wiedergabe stumm zu schalten, drücken Sie die Taste Mute. | Press the button Mute, in order to mute the sound. |
| Der Stumm-Modus (Mute) kann durch erneutes Drücken der Mute oder durch Drücken der MP3-Taste verlassen werden. | The mute mode can be ended by pressing the button Mute or by pressing the MP3-button. |
| Die Lautstärke- und Klangregelung des Musik-Soundsystems erfolgt über die Tasten ▼ ◂ ▲ für die Lautstärke, ▼ 𝄞 ▲ für die Verstellung der Höhen und ▼ 𝄢 ▲ für die Verstellung der Bässe. | The volume and sound regulation of the music sound system is done via the buttons ▼ ◂ ▲ for the volume, ▼ 𝄞 ▲ for adjusting the trebles and ▼ 𝄢 ▲ for adjusting the basses. |
| Für weitere Audioeingänge wurde die Taste AUX in die Fernbedienung integriert. | The button AUX is integrated in the hand control for more audio inputs. |
| Zurzeit ist die Taste ohne Funktion. | This button is currently without function. |
| Das Musik-Soundsystem sollte beim Verlassen der Wanne über die Taste ⏻ ausgeschaltet werden. | The music sound system should be switched off using the button ⏻ when leaving the tub. |

# 7. Cleaning / Disinfection

## 7.1 Cleaning the reclining bathtub AVERO Motion

Clean the reclining bathtub AVERO Motion with a soft, lint-free piece of cloth. For thorough cleaning use a cloth moistened with soap sud. For disinfection you can moisten the cloth with isopropyl-alcohol solvent.

In order to avoid any damage no aerosol detergents, sprays, abrasive or solvents must be used for the control unit.

**Caution:**



**Make sure the sytem is not in operating mode durnig the cleaning process!**

**WARNING:**



**After every treatment, AVERO Motion must be disinfected completely with a disinfectant, in order to avoid any cross-contamination.**

Clean the AVERO Motion with a soft, lint-free cloth. For thorough cleaning use a cloth moistened with soap sud. For disinfection you can moisten the cloth with isopropyl-alcohol solvent. The body of the reclining bathtub AVERO Motion is made of glass reinforced plastic and can be disinfected with surface disinfectants (not aggressive).

## 7.2 Disinfecting the reclining bathtub AVERO Motion

Considering the transfer risks, we recommend disinfecting and rinsing your bath tub carefully between each use. In case you select this option (Cleaning system), you will get a bath tub with an integrated disinfection system.
The disinfection of the tubs is carried out manually with the disinfecting hand shower (yellow). Please note that you can only disinfect with a disinfectant system, but it does not clean it. You must use a sponge and soap, in order to remove grease spots, remains of skin and hair. Never use an abrasive to clean the bath tub!

**Caution:**
Make use of the disinfection system only when the patient has left the bath tub. Strictly follow the instructions of the manufacturer of the disinfectant used. Avoid any direct contact with the concentrated product. As the circumstances require, protect the skin and the eyes with gloves and protective glasses while changing the disinfectant tanks.



**Picture 1:**
The tank containing the disinfectant is accessible via the inspection lid at the foot stand of AVERO Motion. When refilling and replacing the tank make sure that the suction hose reaches the bottom of the tank.
**For opening and removing the disinfectant tank** ***see 6.4*****.**



**Picture 2:**
Take the disinfecting hand shower (yellow hose) and hold it in such a way that the disinfectant solution is sprayed in the bath tub. Start the disinfection by pressing the **Button 9**. Rinse now very carefully the inside of the bath tub. Let the disinfectant act for long enough time (see recommendation of the manufacturer).
Thereafter, wash the bath tub carefully with clear water (**with the patient hand shower**).

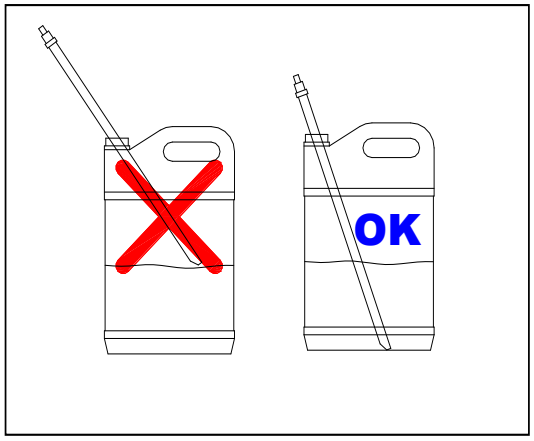


**Picture 3:**
Check regularly (at least once per week), whether there is still enough disinfectant is in the tank. Refill, if necessary. Make sure that the suction hose reaches the bottom of the tank.

**Notice:**



**The nozzles of air spa system must be disinfected after each use!**
**To ensure that no water remains in the nozzles, the blower will continue to run for 30 seconds.**
**Please do not interrupt this "drying cycle" and wait until the blower itself switches off automatically!**

## 7.3 Adjustable disinfectant admixture

If you have selected this option, the flow meter is located at the back of the reclining bathtub AVERO Motion.

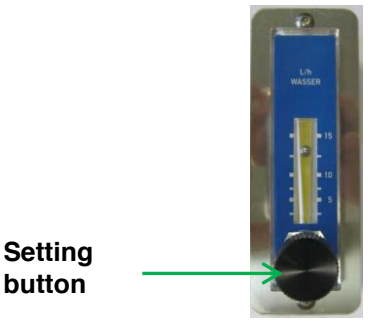


**Setting the mixing ratio:**
Fill the disinfectant tank with the disinfectant. To do this, remove the inspection cover **see 6.4**. The disinfectant tank with a capacity of 2 litre can now be removed and filled. Please note that the disinfection hose must be inserted again in the tank after filling and placing back in the tub.

Hold the disinfection shower in the tank after starting the disinfection with button (9) (page 15). By using the black settings button at the float-type flow meter adjust the desired disinfectant admixture (normally this setting needs to be done only during the first start-up). The extent of admixing depends on the specifications of the disinfectant manufacturer (approx. 60-100 ml/min).

Mixing ratio of disinfectant
(max. line pressure p = 4 bar, temperature approx. 20 °C, density of the medium approx. 1000 kg/m3, suction hose free of air)

**Disinfectant:** **neoform MED FF**

**Supplier:** Chemical factory Dr. Weigert GmbH & Co. KG
Mühlenhagen 85
D-20539 Hamburg
www.drweigert.de

| Value set on the scale (l/h) | Disinfectant concentration (%) |
|---|---|
| 2.5 | 0.5 |
| 5 | 1.1 |
| 7.5 | 1.7 |
| 10 | 2.3 |
| 12.5 | 2.9 |
| 15 | 3.5 |

**Checking the setting:**
1. Open the shower for disinfection.
2. Determine water quantity per minute, calculate water quantity per hour.
3. Divide the value read from the scale by the water quantity.
4. Multiply with 100.
5. Result = concentration in %.

Example: 7 l/min = 7x60 = 420 l/h
4.5 / 420 = 0.01
0.01 x 100 = 1 %

## 7.4 Sterilisation

The reclining bathtub AVERO Motion is **not** suitable for sterilisation.

## 7.5 Contact person for technical information

For technical information and for queries regarding the application please always get in touch with the medical product advisor of your sales partner or the manufacturer.

BEKA Hospitec GmbH
Am Rübenmorgen 3 ● 35582 Wetzlar
Phone: +49(0)641-9 22 20 - 0
Fax: +49(0)641-9 22 20 - 20
info@beka-hospitec.de
www.beka-hospitec.de

# 8. Disposal

## 8.1 Disposal of the packaging material

The expected operating life of the reclining bathtub is approx. 8 years.
Please treat the packing material provided with the reclining bathtub AVERO Motion in compliance with local applicable laws and regulations (recycling).

The metallic parts as well as the plastic and electronic components are to be recycled according to the WEEE.

## 8.2 Product disposal

After the end of the product life cycle get in touch with your BEKA contractual partner, who will deal with the reclining bathtub AVERO Motion as required in compliance with local applicable laws and regulations (recycling).

Being the manufacturer, BEKA Hospitec GmbH will provide more information on environment compatible disposal.

Even before disposing of the reclining bathtub AVERO Motion please clean and disinfect it.

# 9. Safety Check

A "Safety check" (SC) need to be carried out at the reclining bathtub AVERO Motion at intervals of **12 months** together with a service.

Safety checks and maintenance need to be documented in the medical product book.

After the validity period of the inspection plate has expired please contact the manufacturer.

Checks must be carried out by the manufacturer or professional staff authorised by the manufacturer only.

**Attention: The BGV A3 inspection must be carried out with the reclining bathtub AVERO Motion once every year.**

# 10. Troubleshooting and Customer Support

## 10.1 Troubleshooting

| Problem | Relief |
|---|---|
| The height adjustment of the reclining bathtub does not work. | a) Check that power is applied.<br>b) Check the connections between the PLC and operating unit.<br>c) Check control unit for damage.<br>d) Check cable for damage. |
| The reclining bathtub remains in the upper end position or tilt position. | Check that power is supplied. |
| The lifting or tilting motor does not work. | Check that power is supplied. |
| Actuator „stalls“ during lift. | The lifting capacity is exceeded (max. patient weight). |
| The electrical positioning adjustment does not respond. | Check that power is supplied. |
| Hand control does not respond. | a) Check the connector on hand control cable.<br>b) Check that power is supplied. |
| Raise and lower buttons on hand control do not respond. | Check that the cables are properly connected at the control box. |
| Power and temperature indicators do not light. | Check that the fuse is on. |
| The mains voltage fails. | a) Check the fuse.<br>b) Check cable for damage. |
| No water. | a) Check the lock valves of the cold and hot water as well as the pipe interrupter.<br>b) Check the water inlet filter. |
| The automatic filling does not work. | Disconnect from the mains. Run a restart. If this does not achieve the desired results, please contact the BEKA Service. |
| From the fitting only hot or cold water is running. | a) Check that hot and cold water connections are reversed (on site).<br>b) Check the filter and the inlet and outlet fittings for blockage. |
| Water flow rate is too low. | a) Check the filter and the inlet and outlet fittings for blockage.<br>b) Check that the flow rate is sufficient for supply conditions.<br>c) Check the connection hoses for kinking. |
| From the fitting of water occurs. | Check all seals whether they are damaged, replace damaged seals. |

| | |
|---|---|
| Filling rate is too slow. | Water pressure too low. |
| Filling speed too fast. | Water pressure too high (Install pressure reducer on site). |
| The bath water runs off during the bathing process. | a) Check water plugs and if necessary, adjust the screw on the water plugs again.<br>b) Check seal for dirt and damage. |
| The bath water does not run off. | a) Check water plugs and if necessary, adjust the screw on the water plugs again.<br>b) Check seal for dirt and damage. |
| Disinfection does not work. | a) Check flowmeter (maybe closed).<br>b) Check disinfectant container.<br>c) Check hose of disinfectant. |
| The air spa system does not work. | Check that power is supplied. |
| The air spa system fails during operation | a) The air spa system has been used for more than 15 minutes. **Let it cool down.**<br>b) Overheating due to high ambient temperature. **Let it cool down.** |
| The sound system does not work. | a) Check if the USB stick is inserted correctly.<br>b) Maybe the USB flash drive is defective. Insert new USB stick. |
| The color light therapy does not work. | a) Motherboard defective. Contact BEKA Service.<br>b) Defective LED spot light. Contact BEKA Service. |
| If you hear unusual noises on the reclining bathtub. | Contact BEKA Service. |
| If the reclining bathtub is damaged. | Contact BEKA Service. |

## 10.2 Customer service

Please contact the customer service of your local dealer or the manufacturer, if the reclining bathtub AVERO Motion does not function properly and you could not eliminate the error with the relief actions according to section 10.1.

BEKA Hospitec GmbH
Am Rübenmorgen 3 ● 35582 Wetzlar
Phone: +49(0)641-9 22 20 - 0
Fax: +49(0)641-9 22 20 - 20
info@beka-hospitec.de
www.beka-hospitec.de

# 11. Appendix

## 11.1 Technical data

| | |
|---|---|
| **Dimensions and Weights** | |
| - Length entry position: | 176,0 cm |
| - Length lying position: | 190,8 cm |
| - Width: | 86,0 cm |
| - Tub width (inside): | 62 cm (down) / 68 cm (up) |
| - Height with open door: | 192,0 cm |
| - Height hoist: | 20,0 cm |
| - Height reclining position: | 81,0 – 101,0 / 98,5 – 118,5 cm (front / rear) |
| - Height entry position: | 44,0 – 64,0 / 131,0 – 151,0 cm (front / rear) |
| - Entrance height min: | 49 cm |
| - Entrance heigth max: | 69 cm |
| - Inclination angle: | 23° |
| - Weight without packing: | ca. 175 kg |
| - Water consumption prefilled foot volume: | 98 l |
| - Capacity (without patient): | ca. 270 l |
| - Tub emptying (liter / min): | 75 l |
| - Water consumption with patient: | 185 l |
| - Patient weight: | max. 210 kg |
| - SWL (Safe Working Load): | **300 kg** (Patient and water) |
| **Electrical data** | |
| - Voltage: | 120 V, 60 Hz |
| - Power consumption: | 840 VA |
| **Control unit** | |
| - Type of protection: | Class I |
| - Application part: | Type B |
| - Operating mode: | Continuous operation |
| - Input voltage: | 120 V~ (AC) / 60 Hz |
| - Power input: | 7 Amp. |
| **Electrical motor data** | |
| - Power supply: | 24 V |
| - Frequency: | 50 / 60 Hz |
| - Power input: | 4,2 Amp. |
| - Power-on time max.: | 1 Min. On and 9 Min. Off |
| - Protection type: | IP X4 |
| **Environmental condictions** | |
| **Operation** | |

| | |
|---|---|
| - Temperature range: | Between 10° C and 40° C |
| - Relative humidity: | Non-condensing between 30% and 95% |
| - Atmospheric pressure range: | 800 – 1060 hPA |
| **Storage and Transport** | |
| - Temperature range: | Between -20° C and 70° C |
| - Relative humidity: | Non-condensing between10% and 80% |
| - Atmospheric pressure range: | 500 – 1100 hPa |

## Manufacturer

BEKA Hospitec GmbH
Am Rübenmorgen 3 ● 35582 Wetzlar
Phone: +49(0)641-9 22 20 - 0
Fax: +49(0)641-9 22 20 - 20
info@beka-hospitec.de
www.beka-hospitec.de

CE

## 11.2 Dimensions

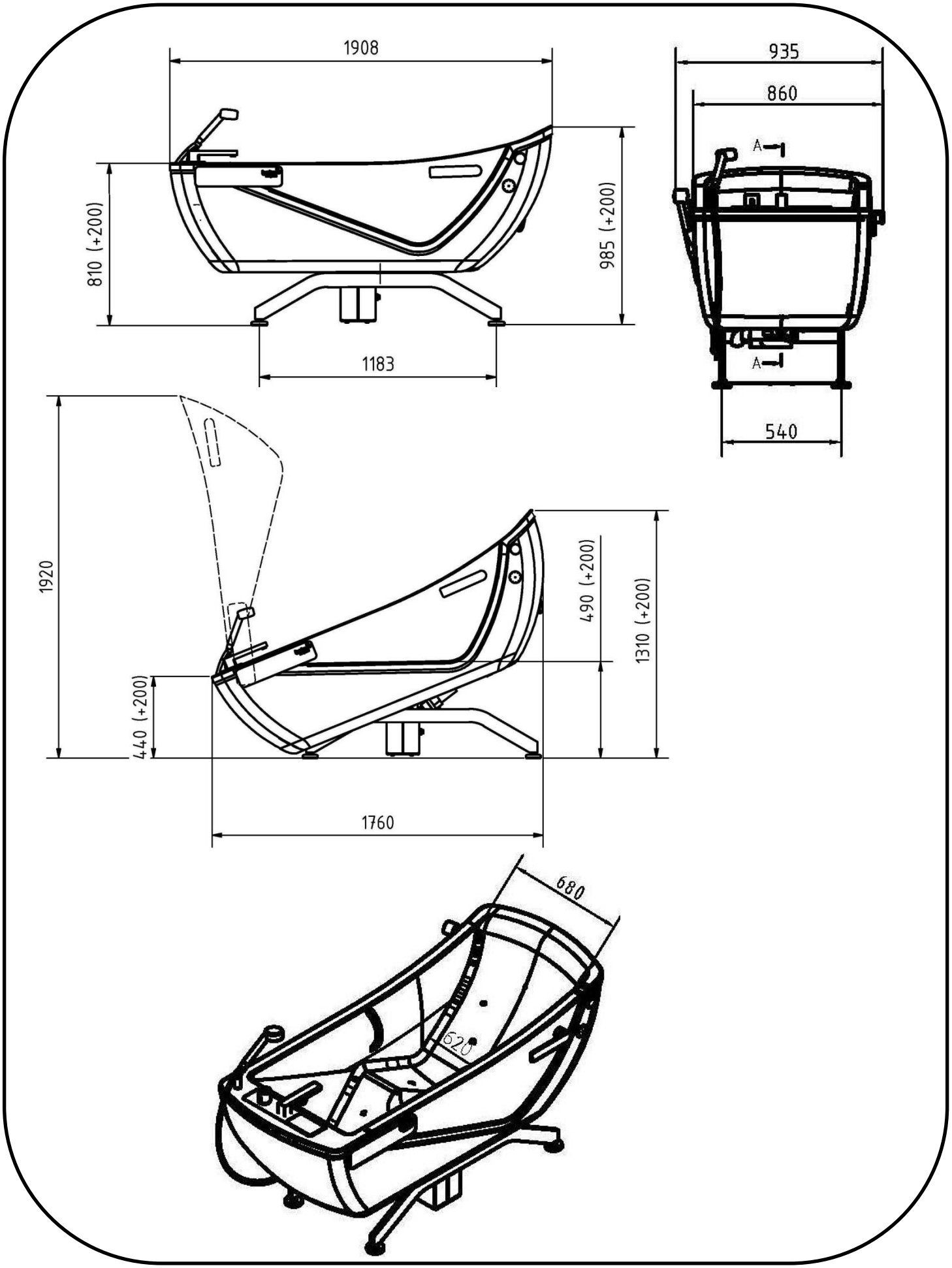

## 11.3 Icons and Symbols used



Observe accompanying documents / operating manual.



Caution for a hazard area.



Feet shall not be placed on the base frame.



Application part "Type B" according to DIN EN 60601-1.



No domestic waste.
Do not put the treatment system, and packaging materials into the domestic waste.

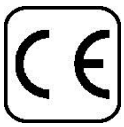

CE mark according to 93/42/EEC for medical products.



Use only inside.



Type of protection: Class I.

**IPX4**

Water splashing against the enclosure from any direction shall have no harmful effect.

## 11.4 Declaration of conformity

Upon request, you can get the declaration of conformity of the reclining bathtub AVERO Motion from its manufacturer **BEKA Hospitec GmbH**.

## 11.5 Additional equipment / Accessories AVERO Motion and AVERO Motion E

| AVERO Motion | | AVERO Motion E | |
|---|---|---|---|
| 810150560 | Automatic water stop | 910150561 | Automatic water stop |
| 810150572 | Music sound system | 910150572 | Music sound system |
| 810150570 | Air spa system | 910150571 | Air spa system |
| 810150579 | Aroma therapy system | 910150579 | Aroma therapy system |
| 810150575 | Coloured light therapy system | 910150576 | Coloured light therapy system |
| 810150585 | Cleaning system | 910150580 | Cleaning system |
| 910150586 | Second holder for hand shower | 910150586 | Second holder for hand shower |
| 910150587 | Emergency function in case of power failure | 910150587 | Emergency function in case of power failure |
| 910150565 | Comfortable neck cushion | 910150565 | Comfortable neck cushion |
| | | 810150555 | Hand control |

# 12. Installation instructions

## 12.1 Change hand shower

**Picture 1:**
The picture shows the hand shower with the screwed cap nut.





**Picture 2:**
Unscrew the cap nut of the hand shower.

**Picture 3:**
The picture shows the unscrewed hand shower hose with the cap nut.



**For installation, pay attention to the sequence of the pictures 3 ⟶ 1!**

## 12.2 Change hand shower hose

**Picture 1 and 2:**
The two pictures show the hand shower hose and its elbow connector on the tub.





**Picture 3:**
Unscrew the shower hose on the elbow connection at the tub.



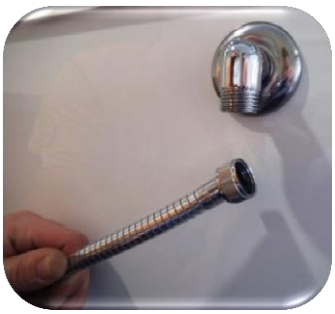

**Picture 4:**
The picture shows the unscrewed shower hose.

**For installation, pay attention to the sequence of the pictures 4 ⟶ 1!**

## 12.3 Change hand shower holder

**Picture 1:**
Required tools:
1x Allen key 2.5 mm





**Picture 2:**
The picture shows the holder of the hand shower with headless screw.

**Picture 3:**
Loosen the headless screw from the holder of the hand shower.





**Picture 4:**
The figure shows the headless screw loosened from the holder of the hand shower.

**Picture 5:**
Now remove the holder of the hand shower and replace it by a new one.



**For installation, pay attention to the sequence of the pictures 5 ⟶ 1!**

## 12.4 Change disinfecting hand shower

**Picture 1:**
The picture shows the disinfecting hand shower.



**Picture 2:**
Remove the disinfecting hand shower from the holder.





**Picture 3:**
Unscrew the cap nut of the disinfecting hand shower.

**Picture 4:**
The picture shows the unscrewed cap nut of the disinfecting hand shower.



**For installation, pay attention to the sequence of the pictures 4 → 1 !**

## 12.5 Change disinfecting hand shower hose

**Picture 1:**
The picture shows the hose as well as the elbow connection at the tub of the disinfecting hand shower.





**Picture 2:**
Unscrew the shower hose on the elbow connection of the disinfecting hand shower at the tub.

**Picture 3:**
The picture shows the unscrewed shower hose on the elbow connection of the disinfecting hand shower hose.



**For installation, pay attention to the sequence of the pictures 3 → 1 !**

## 12.6 Change excenter fitting (drain)

**Picture 1:**
The image shows the excenter.





**Picture 2:**
For loosening the excenter, pull it away upwards.

**Picture 3:**
The image shows the removed excenter.





**Picture 4:**
The overrun must be set horizontally (Viega logo readable) before the drip plug can be loosened.

**Picture 5:**
Bring the drip plug in the upper position.





**Picture 6:**
The drip plug can now be removed by pulling it upward.

**Picture 7:**
The picture shows the removed drip plug.



**Caution:**
While installing the discharge nozzle in the housing, make sure that it engages correctly.

**For installation, pay attention to the sequence of the pictures 7 → 1!**

## 12.7 Thermostatic mixer calibrate / adjust

**Picture 1:**
Required tools:
1 x Allen key 2,5 mm
1 x Screwdriver flat 0,6 x 3,5 mm





**Picture 2:**
Remove with the screwdriver (flat) the cap of the knob.

**Picture 3:**
Loosen and remove the screw with the screwdriver (hex).





**Picture 4:**
Mark the position of the cover on the mounting plate (chrome) and press the lock.

**Picture 5:**
Now you can remove the cover upwards.





**Picture 6:**
The image shows the removal of the cover.

**Picture 7:**
The picture shows the removal of the cover from the thermostat mixer.






**Picture 8:**
Now let the water run into the tub and check the display shows the temperature.

**Picture 9:**
The picture shows how you can control the temperature.
Adjust so that a temperature of 41 ° C are shown on the display.





**Picture 10:**
Now you can reinstall the cover.
Make sure that you reinstall the cover in position as you have this removed before (marking).

**Picture 11:**
Now bring on the safety bolt on the cover.





**Picture 12:**
Finally press nor the cap on the exemption of the screw.




BEKA Hospitec GmbH . Am Rübenmorgen 3 . 35582 Wetzlar .Germany . Phone +49(0) 6 41 - 9 22 20-0 .Fax +49(0) 6 41 - 9 22 20-20