Compact Bath Range

Care Baths (Plus; DCII; Fixed; Solo)

see separate document for Compact Pure

astor bannerman
beyond routine

Installation and User Guide



Astor Bannerman 50.096.08.0001 (Rev2 03 24)
Compact Bath Range (Plus, DCII, Fixed, Solo) Installation and User Guide
Subject to technical modifications & changes

Table of contents

1. Company Introduction 5
   1.1 Acknowledgement 5
   1.2 Manufacturer's address 5

2. Introduction 6
   2.1 Preface 6
   2.2 Liability and warranty 6
3. Operating manual 7
   3.1 Validity 7
   3.2 Type plate 7
   3.3 Description 7
   3.4 Product Variants 8
4. Safety 9
   4.1 Intended and appropriate use 9
   4.2 Safety instructions 9
   4.3 Standard Symbols 10
   4.4 Warnings 13
5. Transport and Pre Installation 14
   5.1 Unpacking the product 14
      5.1.1 Removing the cardboard 14
      5.1.2 Loosening the product from the pallet 15
      5.1.3 Requirements for the place of installation 16
      5.1.4 Installing the care tub at the place of installation/screw connections 17
6. Installation 23
   6.1 Electrical connection 23
   6.2 Protective conductor 23
   6.3 First start-up 24
7. Operating elements and their function 25
   7.1 Handset 26
      7.1.1 Handset - 2 buttons (COMPACT Fixed Height) 26
      7.1.2 Handset - 2 buttons (COMPACT Solo) 26
      7.1.3 Handset - 4 buttons (only COMPACT Plus and DC versions) 27

7.1.4 Unlocking the handset (only DC -versions) 27
7.1.5 The height adjustment (COMPACT Plus and Solo) 27
7.2 Functions of the patient chair 28
7.3 Removable patient chair (option) and carrier for the patient chair (option) 29
7.3.1 Hooking the patient chair: 30
7.3.2 Unhooking the patient chair: 32
7.4 Thermostatic mixer (option) 35
7.5 Battery backup (option for COMPACT Solo) 35
7.6 Optional functions 35
8. Operation 36
8.1 Prior to use 36
8.2 During use 36
8.2.1 Installing the patient in the COMPACT Plus care tub (without removable patient chair) 37
8.2.2 Moving the patient out of the COMPACT care tub 38
9. Cleaning 39
9.1 Cleaning the COMPACT 39
9.2 Sterilising the COMPACT 39

10. Checks/tests 40
11. Waste disposal 41
11.1 Disposal of the packaging material 41
11.2 Disposal of the product 41
11.2.1 Battery 41
12. Troubleshooting/customer care service 42
13. Appendix 44
13.1 Technical data 44
13.2 Dimensions of the COMPACT care tub 45
13.3 Spareparts/consumables 46
13.4 .Electromagnetic Compatibility 48
13.5 Journal 51

1. Company Introduction

1.1 Acknowledgement

Thank you for deciding to choose an Astor Bannerman Bath. Our products are manufactured and tested according to stringent quality criteria, and are designed to support people to live their lives beyond routine.

1.2 Manufacturer's address

astor bannerman beyond routine	Astor Bannerman The Elephant Works Andoversford Link, Cheltenham GL54 4LB UK Phone: +44(0)1242 820820 info@astorbannerman.co.uk

2. Introduction

2.1 Preface

A correct use of the device is essential in order to ensure that it remains safe and well functioning. Please read the provided operating manual carefully and observe in particular the safety instructions.

The maintenance, inspection, assembly and installation as well as further technical interventions on the product must only be executed Astor Bannerman or by specialised companies authorised to do this by Astor Bannerman. The operation of the product as well as technical interventions on the product must only be carried out by specially trained personnel.

2.2 Liability and warranty

Once registered, this product has a 3 year warranty against all defects in manufacture of the product. This does not affect your statutory rights.

To validate your warranty and for full terms and conditions, please register your product and your details immediately:

online at: www.astorbannerman.co.uk/services
email our support team: support@astorbannerman.co.uk
or call us on: +44 (0)1242 820820

This warranty is provided by Astor Bannerman to the registered customer.

Equipment requiring commissioning must be commissioned by a competent, Astor Bannerman trained technician for this warranty to be valid.

To maintain the warranty, the equipment must be serviced at least on an annual basis by a competent, Astor Bannerman trained technician. Service or repairs undertaken by persons other than competent qualified technicians may invalidate this warranty.

This product has been designed using quality components and tested under standard usage conditions to give a 10 year service life based on regular servicing and average usage patterns and conditions. This does not alter the warranty offered.



3. Operating manual

3.1 Validity

This operating manual contains information, which is required for the operation and use of the product. In addition to the description of the equipment, the operating manual also includes a number of abstractions and exemplary illustrations. The equipment of the product therefore may differ in part from the descriptions and illustrations. Please also observe the sections covering the cleaning as well as the assembly and the disassembly of individual components of the product.

Please read the operating manual and the safety instructions before starting to use the product. Keep the operating manual near the device for future reference.

3.2 Product Labels

The product label is located on the wrap around foot covers of the bath.

The shown serial number (SN) YYYY.MM.DD-SEQ is just an example. In case of queries, please mention the serial number printed on the type plate of your device.

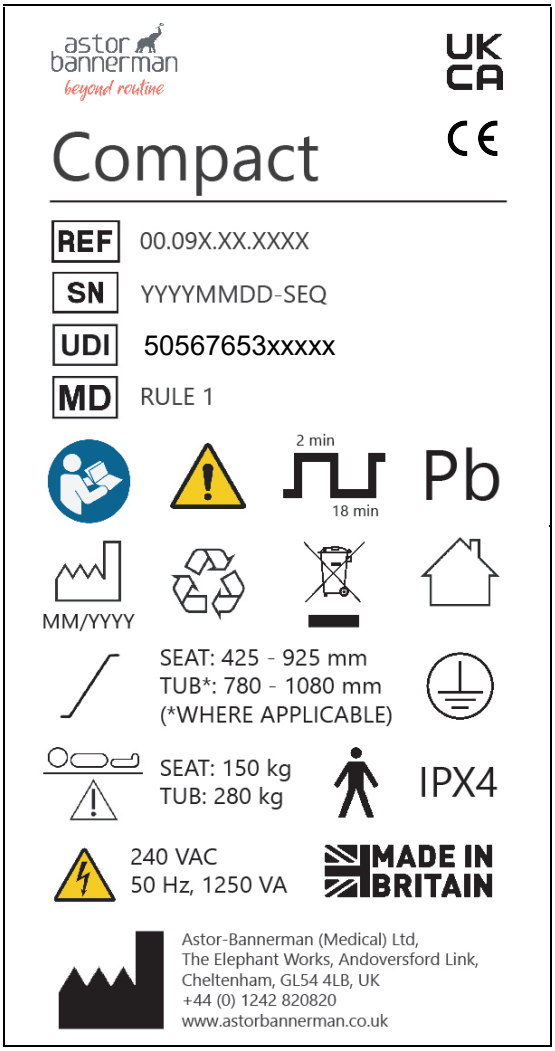

3.3 Description

In this manual, the product is called care tub, lifting bath tub, bath tub and tub.

3.4 Product Variants and Product Codes

The Astor Compact Range covered by this document has the following variants, components and configurations:

CODE NUMBER	DESCRIPTION
00.092.60.16XX	Compact, Fixed Height, 1600, LH/RH, No Taps, LNT
00.092.60.17XX	Compact, Fixed Height, 1700, LH/RH, No Taps, LNT
00.092.70.000X	Compact, Fixed Height, 1600/1700, LH/RH, Fixed Seat
00.092.80.000X	Compact, Fixed Height, 1600/1700, LH/RH, Detachable Seat
00.093.00.00XX	Compact Plus, DCII, 1600/1700, LH/RH, Care Variations
00.093.51.000X	Compact Plus, DCII, 1600/1700, LH/RH, Blended Water
00.096.00.000X	Compact Plus, DCII, 1700, LH/RH, PEX, Var Taps, Det/Fix Seat
00.096.80.000X	Compact Plus, DCII, 1600/1700, LH/RH, Var Taps, Det/Fix Seat
00.093.70.000X	Compact Plus, Showersafe, 1600/1700, LH/RH, Var Taps, Det/Fix Seat
00.093.80.000X	Compact Plus, Showersafe, 1600/1700, LH/RH, Detachable Seat
00.093.52.000X	Compact Plus, Matira, 1600/1700, LH/RH, Det/Fix Seat
00.094.53.000X	Compact Solo, 1600/1700, No Taps, No Seat

The Device has the following accessories:
None

4. Safety

4.1 Intended and appropriate use

The Astor COMPACT bath has been designed for bathing and giving personal care to dependent bathers in nursing homes, facilities for people with disabilities and private households. It is only suitable for use by children and adults who are capable of maintaining an upright seated position. Bathers should not be left unattended.

The product may only be used for the specified purpose. This device is a standalone product and should not be used with other devices.

No side effects associated to use of this product are known. However, you must still respect and observe the safety instructions.

CAUTION:



The Astor COMPACT bath must be used by adequately qualified carers with good knowledge of the environment in which the care is being given, its standard practices and usual procedures as well as in accordance with the directives included in the operating manual. In case of doubt, please consult with the treating doctor.

4.2 Safety instructions

Please read the following safety instructions prior to using the product. All notes, specifications and warnings mentioned on the device as well as in the present operating manual must be respected and observed. The manufacturer, Astor Bannerman, shall not accept any liability for any damages, failures or faults caused by improper operation or handling.
If a serious incident occurs in relation to this product, it should be reported to Astor Bannerman and if in the UK, Regulatory Authority (MHRA).

4.3 Standard symbols

Below are some common symbols used throughout this document and on the product labelling.

This product is UKCA/CE Marked and is certified to The Medical Device Regulation (EU) 2017/745. It also complies with Supply of Machinery (Safety) Regulations 2008 and The Medical Device Regulations 2002.

REF — Astor Bannerman product reference number.

SN — Astor Bannerman product serial number.

FOLLOW INSTRUCTIONS FOR USE: Before installing or using this equipment you must read and fully understand these instructions. Failure to comply with these instructions may result in accidents resulting in serious personal injury or the product being damaged.

CAUTION: To indicate that caution is necessary when operating the device or control close to where the symbol is placed, or to indicate that the current situation needs operator awareness or operator action in order to avoid undesirable consequences.

WARNING: This symbol indicates a hazardous situation which could result in serious injury or even death if not avoided.

WARNING: This symbol indicated a hazard relating to electricity/voltage.

Type B applied parts. Parts of this product in normal use necessarily comes into physical contact with the patient to perform its function.

This product has a duty cycle of 2 minutes ON and 18 minutes OFF.

This product is for indoor use only.

ACTION: This sign is used to highlight a mandatory action that must be followed by the user.

Identify any terminal which is intended for correction to an external conductor for protection against electric shock in case of a fault, or the terminal of a protective earth (ground) electrode.



Parts of this product can be recycled.



Parts of this product must be separated when being disposed of.

Pb

The battery used in this product contains Lead.



Details of product manufacturer.



Symbol indicated the date of manufacture.

IPX4

This product has been tested for water ingress in accordance with IPX4.

MD

This product is a medical device, rule 1.



The maximum working load for the seat is 150 kg and tub is 280 kg.



The lifting range of the seat is 425 - 125 mm; tub is 780 mm - 1080 mm.



WARNING: This symbol indicates a hazard associated with EMC (Electromagnetic Compatibility)

MADE IN BRITAIN

Astor Bannerman products are proudly made in Britain.



To signify a prohibited action.



WARNING: These instructions must be read and understood before installing or using this equipment. Failure to comply with these instructions may result in accidents resulting in serious personal injury or the product being damaged.

WARNING: No modification of this equipment is allowed without express authorisation from Astor Bannerman. If you suspect that any individual parts may be damaged contact Astor Bannerman. Do not remove, attempt to repair or install parts yourself, unless directed to do so by Astor Bannerman



CAUTION: The product must be installed professionally by a qualified trained individual.

Astor Bannerman cannot be held liable for injury to persons or damage to property caused by faulty installation.



WARNING: This electrical equipment needs special precautions regarding electromagnetic compatibility (EMC) and needs to be installed and put into service in accordance with the EMC information. It is unlikely that the user will encounter problems with the product because of inadequate electromagnetic compatibility. However, portable and mobile RF communications equipment can affect medical electrical equipment. When the product is connected to the local mains power supply, we recommend the use of electromagnetic shielding and similar preventative measures to avoid conducted emissions. Prior to installation please ensure that there are no existing equipment in the environment that could be adversely affected by electromagnetic interference.

Use of the device should be discontinued if it is suspected that the equipment is being affected by electromagnetic interference.



WARNING: Risk of electric shock if equipment is not used correctly.

WARNING: To avoid the risk of electric shock, this equipment must only be connected to a mains electrical supply with protective earth. The installer must verify that the protective earth terminal of the control box is connected to the external protective earthing system.

WARNING: The bath tub must be connected by a qualified and competent professional.

WARNING: To ensure protection by electrical separation, the product must be supplied by a mains supply circuit that does not supply power to any other equipment, unless it incorporates a residual current protective device (RCD) with a rated residual operating current not exceeding 30 mA. The circuit must be grounded using a protective earth connection and able to be isolated from mains supply by means of a switch installed in a wall or cabinet. Ensure that location of the mains isolation switch or coupling is easy to access and use.

WARNNG: The bath is powered by a control system with battery backup. The battery enables the use of the bath in the event of mains electrical supply failure. It is essential that mains electrical power is switched on at all times to maintain the charge of the backup batteries. Ensure that the device is connected to the internal battery at all times.

4.4 Warnings

Note

- The product may only be installed and maintained by trained professionals.
- The product may only be operated by trained staff.
- Protect the product against direct sunlight and heat.
- The equipment is not authorised for use in potentially explosive atmospheres.
- Never exceed the duty cycle or the maximum load. See Appendix.
- Never cover up, oversticker or change the slots and holes of the device.
- Do not operate or store moisture-sensitive device in the vicinity of the bath tub.
- Please ensure that the power supply is always switched on throughout the treatment.
- The operator must ensure that the area above and below the bath tub is free of obstacles that could obstruct the free upward and downward movement of the bath tub.
- In order to prevent any electromagnetic interference (EMC), the simultaneous use of short-wave or microwave therapy device in the immediate vicinity of the device is strictly forbidden. Mobile telephones could also cause interference.
- Route the mains and the connecting cable so that they cannot be damaged. Damaged mains cables could cause fire or lead to electrocution and must not be used.
- The caregivers must protect their skin and eyes against concentrated disinfecting and cleaning products. Use a face mask to protect yourself against aerosols.
- Check prior to each use that all visible parts are intact. The product must not be used if any parts are damaged. Prior to each use of the device and its accessories, the user must check the functional safety and the good condition of the device and its accessories (visual check, functioning).
- The product must be cleaned after each use.
- Supervision by the caregiver is required throughout the use of the bath.
- Please make sure that your feet are not located beside the bath tub before and during the height adjustment procedure.
- Do not stand between the bath tub and an obstacle during the transport procedure.
- As part of the monthly maintenance, check the pressure hoses for leakage, the connections for tightness and the electrical connections for cable cracks.

WARNING: 	**Risk of Burns.** **Check the water temperature prior to each use.**

CAUTION:	In case of unusual noises, damages or malfunctions, the product no longer must be used.

5. Transport

Transport the care tub towards the planned place of installation.

Use a lift truck or similar for the transport.

Position the bath so that it stands stable and cannot tilt.

5.1 Unpacking the product

To remove the packaging materials, you will need a cutter knife.

CAUTION:	Take care so as to not damage the product when using tools. Do not cut with the cutter in the cardboard.

5.1.1 Removing the cardboard

Proceed in the following way to remove the cardboard:

Cut the straps with a cutter knife and remove the straps.

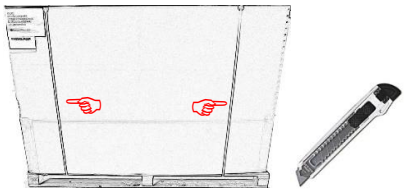

Lift the cardboard up to remove it and put it aside.

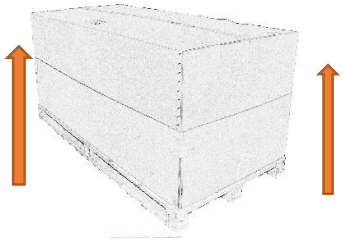

5.1.2 Loosening the product from the pallet

The tub is strapped to the pallet on both sides.

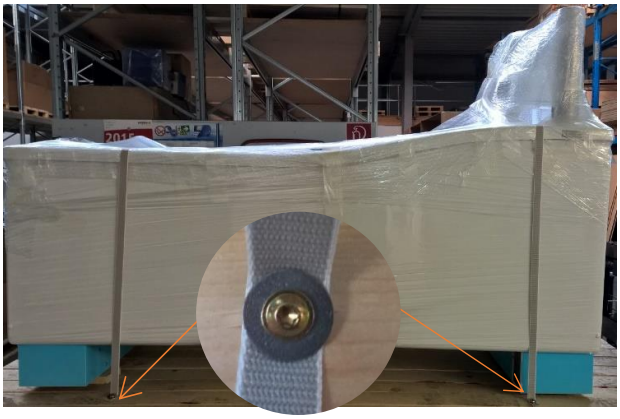

Proceed in the following way to loosen the product from the pallet:
Unscrew the 4 fixing screws of the straps
Remove the straps

Once the external fixings have been removed, there are an additional four fixings contained on the inside of the bath foot panels that secure the bath frames to the pallet. These fixings must all be removed to allow the bath to be removed from the pallet. To do so, the tub must be raised and therefore powered. A mains connector block or similar may be used to temporarily connect the bath to mains power.
The procedure for bath removal is as follows:

1. *Remove a long side panel (as described in 5.1.4).*
2. *Connect the bath to an appropriate power source.*
3. *Raise the bath using the handset supplied.*
4. *Remove inner foot panels as appropriate (as described in 5.1.4).*
5. *Remove the 4 screws that attach the bath to the pallet.*
6. *Set panels to one side as you will need to reattach them later.*
7. *Remove the bath from the pallet using appropriate lifting equipment*

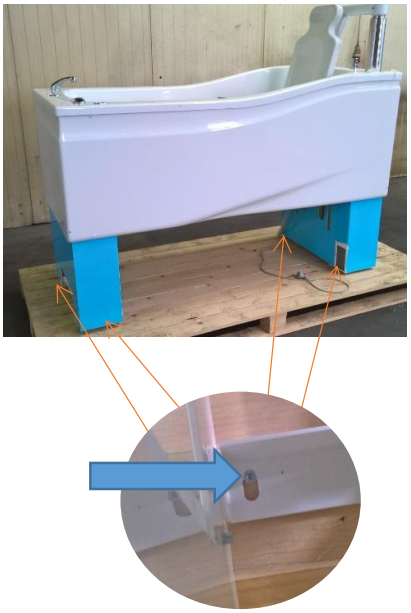

***Warning:** Due to the weight of the bath this will require 2 people.*

Lift the tub off the pallet.
Install the bath tub at the intended location of use.
Remove the bubble wrap and the stretch film

After all fixations have been removed, you can lift the care tub from the pallet.

The accessories for your bath tub are included in the supplied cardboard box.

5.1.3 Requirements for the place of installation

Instructions for the place of installation:

- Any wall decorations including floor coverings and tiles must be complete before the care tub is installed.
- Adjacent walls must be perpendicular, flat and free of obstructions. For instance, no electrical showers or towel racks may be installed in the motion range of the height-adjustable bath tub and the patient chair.
- The tub can be set up as corner bath, as recessed bath or as freestanding tub.
- A minimum distance of 40 mm (1.57") to adjacent walls or fixed installations/ appliances is required (e.g. heating).
- **CAUTION:** There must be sufficient space for the patient's legs. Moreover, there must be sufficient space to swivel the patient chair in and out.
- The floor must be flat, level and free of obstacles, including pipework and wiring in the shown hatched areas on both sides of the tub; this includes, amongst other things, floor heating etc.
- The floor must be of adequate strength / reinforced (especially in the hatched areas) to carry the weight of the care tub, the water and the patient.

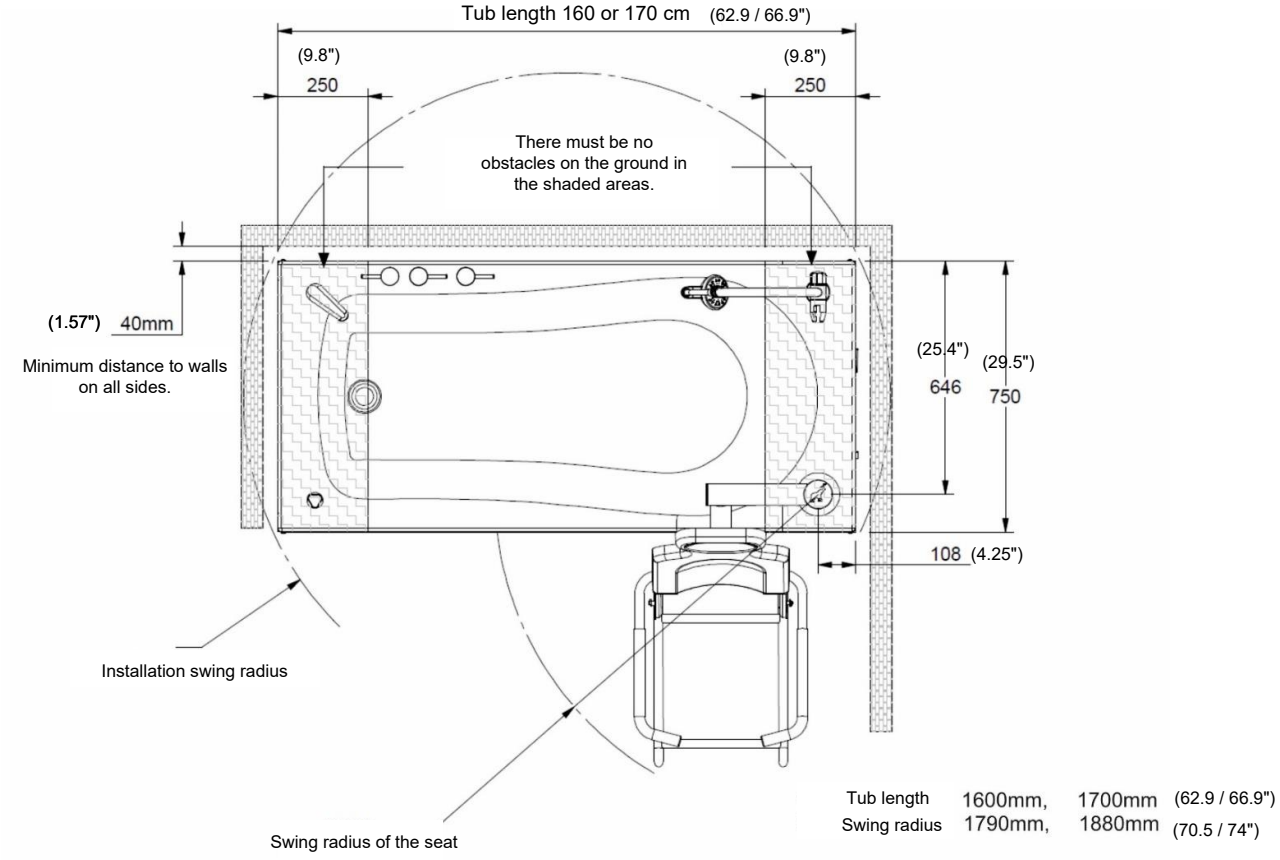

5.1.4 Installing the care tub at the place of installation/screw connections

Before you can fix the care tub to the floor, you must remove the side parts, so that you have smooth access to the screw holes.

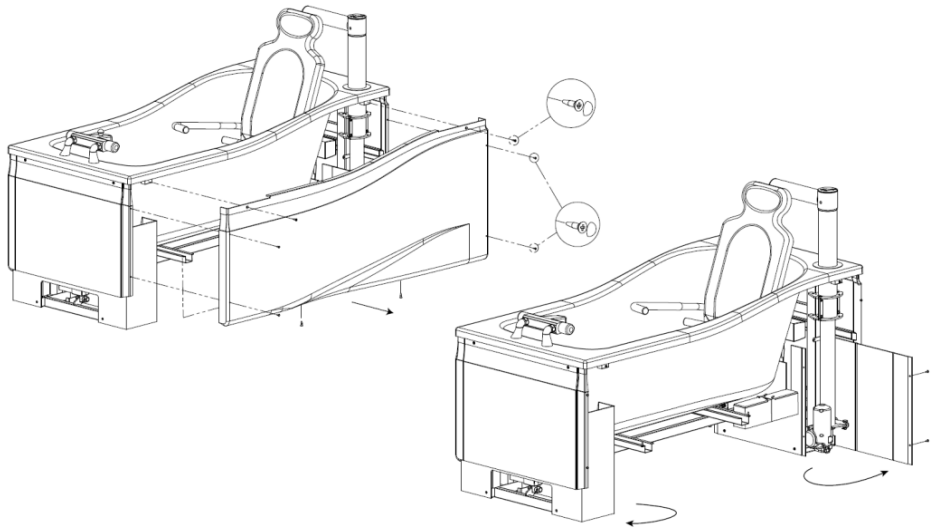

Raise the tub to its top position to access and install the screws.

The care tub is secured to the floor through 7 fixing points.

Please ensure that the care tub is fixed at all fixing points.

Use the appropriate fixation for the floor onto which the care tub must be installed.

Lifting care tub:

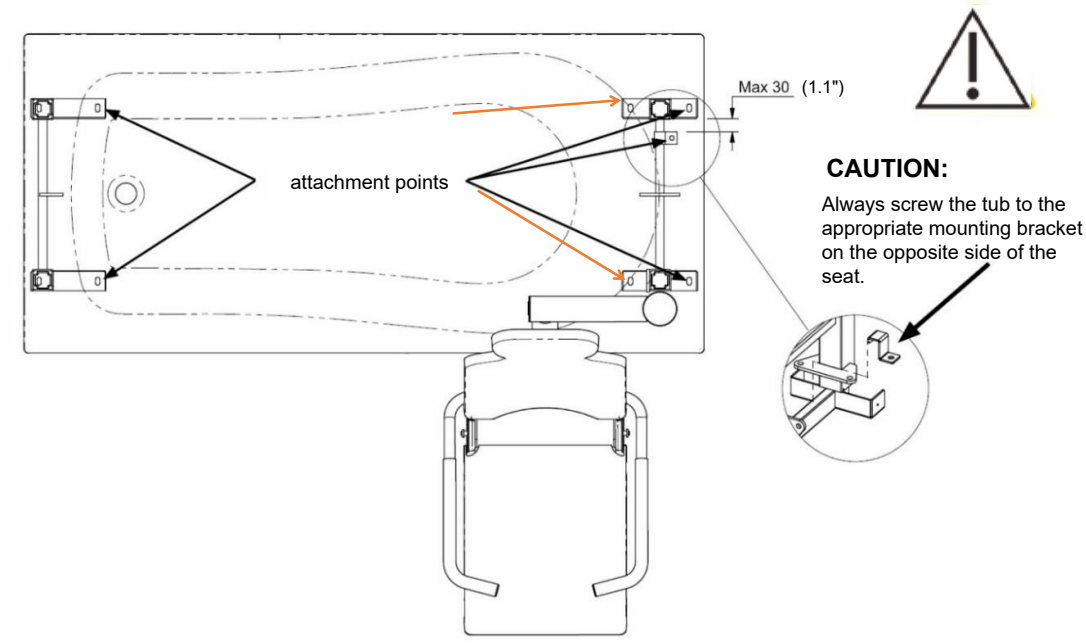

Fixed Height care tub:

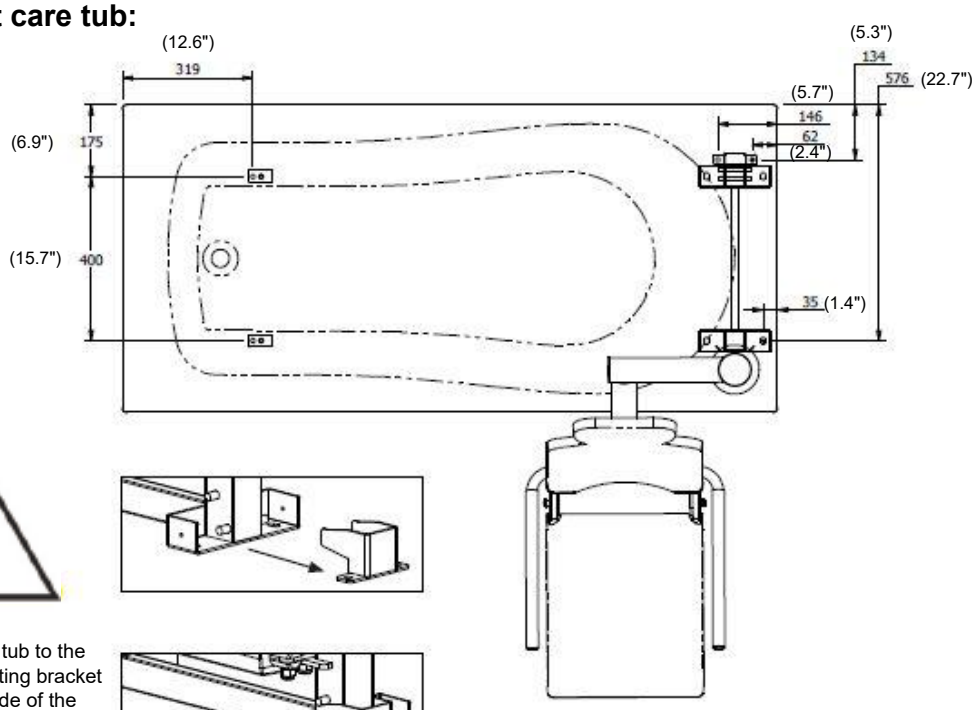



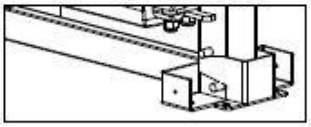

CAUTION:
Always screw the tub to the appropriate mounting bracket on the opposite side of the seat.

Dimensions from the centre of the tub

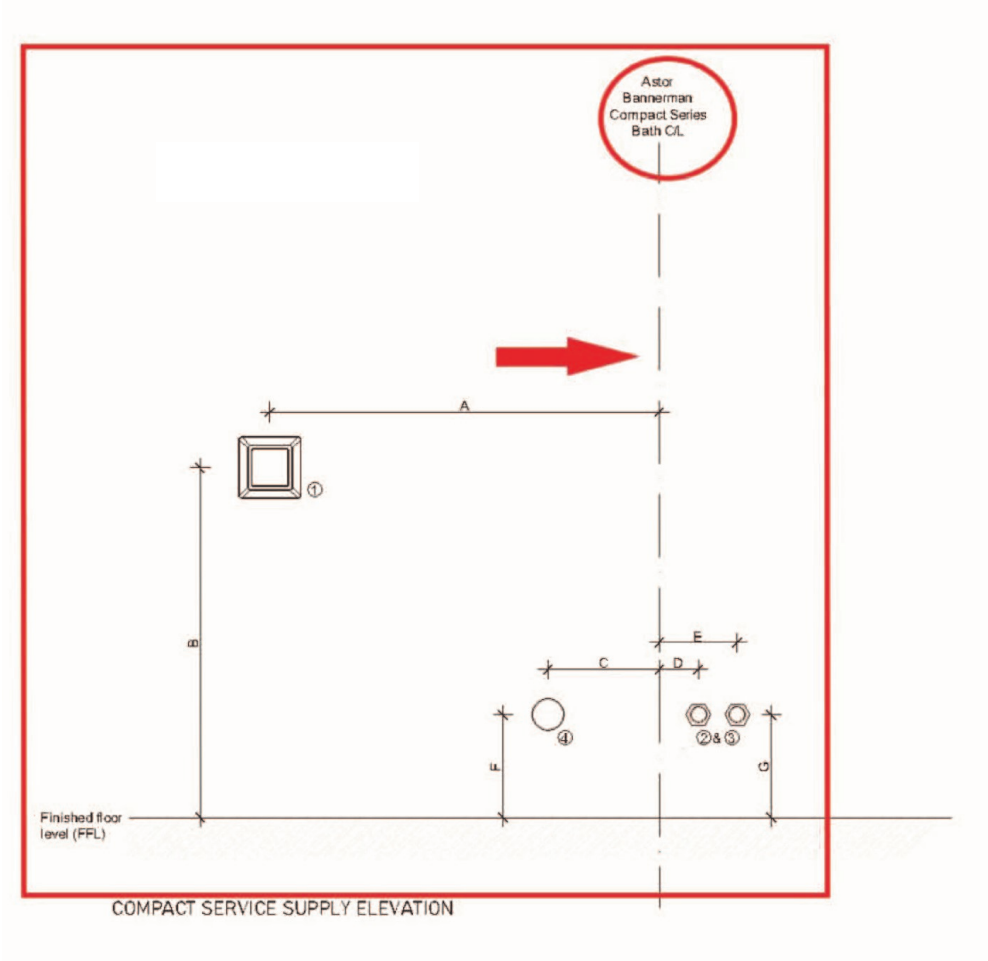

COMPACT SERVICE SUPPLY ELEVATION

Reference	Measurement
A	500 mm (19.7")
B	450 mm (17.7")
C	150 mm (5.9")
D	60 mm 2.4")
E	120 mm (4.7")
F	140 mm (5.5")
G	140 mm (5.5")

Reference	Service
1	Power Supply Point - IPX4
2	22 mm Diameter Copper Supply Pipe
3	Ballofix Isolation Valve
4	42 mm Diameter uPVC Waste Pipe

WARNING:

- **Risk of burns. Prior to the first use, the thermostatic mixer must be set up by a qualified person.**

Connecting own faucet

CAUTION:
Faucets that are not standard included in the delivery, may only be fitted in the hatched area of the drawing below.

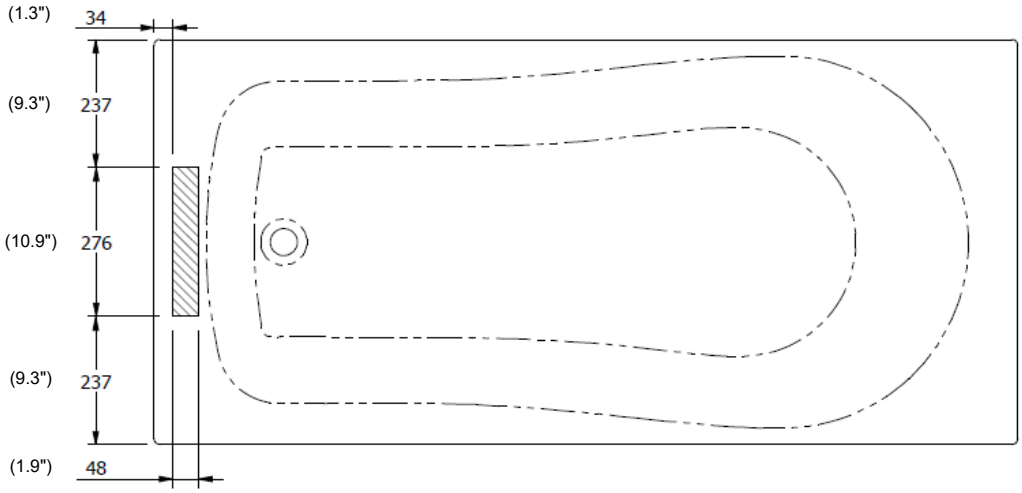

CAUTION:
It is the plumber's responsibility to check whether all connections are correctly realised and do not leak.

Astor Bannerman assumes no liability for any losses or consequential damages, which are caused by an inadequate installation.

Fixing to the Floor

WARNING: Risk of serious injury through product falling. Ensure you have met the pre-installation requirements before fixing to the floor.

TOOLS REQUIRED: Floor fixing template, drill, drill bits, crosshead screwdriver.
We recommend installation into either solid concrete or wooden joists. This section will describe both, but a structural engineer should be consulted if there is any uncertainty if your floor does not meet the pre-installation requirements.

Wooden Joists
1. Lay the floor fixing template on the floor.
2. Drill suitable pilot holes. If using the minimum recommended 3/16" lag screw (No.10 coach screw) this should be a 6 mm / 0.24" diameter pilot hole in all 7 positions.
3. If moving into an alcove or against a wall it may now be preferable to refit one side panel and gantry before fixing the product into its final position. It may now also be suitable to temporarily replace foot wrap around covers whilst leaving the straight portion unattached to gain access to fixings.
4. Move bath into position over the pilot holes.
5. Screw the minimum recommended 3/16" lag screw (No.10 coach screw) x 80 mm / 3.1" until the head is tight to the bath frame. All 7 coach screws should have been used. See Joist fixing diagram below.

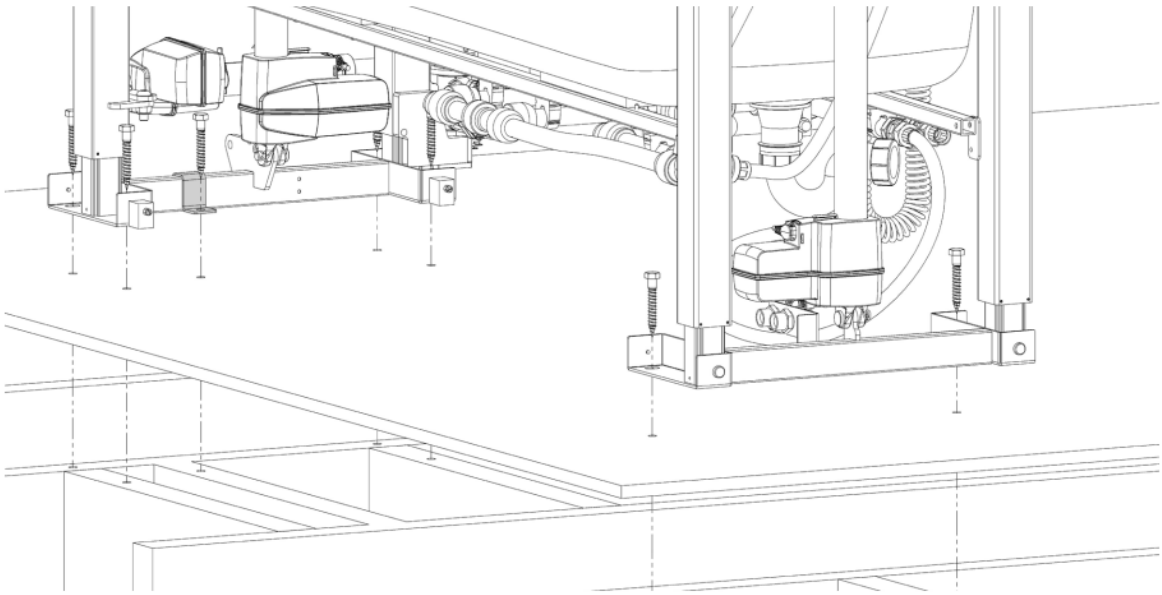

Joist Fixing Diagram

Concrete

1. Lay the floor fixing template on the floor.
2. If using the minimum recommended M10 x 80 mm / 3.1" sleeve anchor bolts, then these should be 16 mm / 0.63" holes unless specified differently by the anchor manufacturer.
3. Clean all holes using a wire brush, vacuum cleaner or like to remove any dust and debris.
4. Insert the sleeve anchor into the hole.
5. If moving into an alcove or against a wall it may now be suitable to refit one side panel before fixing the product into its final position.
6. Move bath into position over the sleeve anchors and bolt down to torque rating specified by manufacturer of the sleeve anchor.

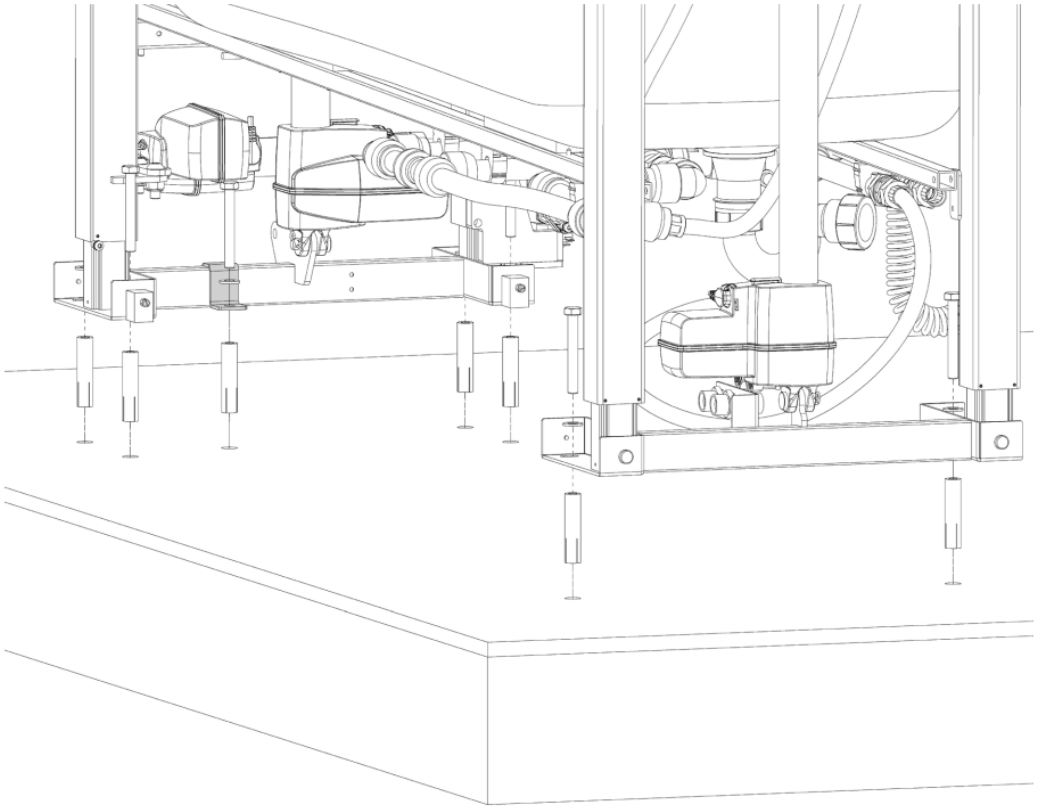

Concrete Fixing Diagram

6. Installation

The bath tub is supplied ready for use.

Prior to the assembly of the bath, the local connection pipes must be sufficiently flushed before the care tub is connected. To avoid soiling of the pipes and fittings, dirt filters must be installed on site.

CAUTION: 	To connect the tub to the water supply, the supplied dirt filters must be installed on site. Please contact your plumber to this effect.

6.1 Electrical connection

The connection of the bath tub must be executed in accordance with the technical drawings issued by Astor Bannerman plus and local regulations or guidelines for the set-up and layout of wet areas and the current local electrical standards. All supply and drain hoses as well as the electrical cables must be installed so as to avoid the danger of tripping.

The COMPACT tub is connected to the power supply network through a shock-proof protective socket featuring the legally prescribed splash guard (IP class), 240 V AC/50Hz, 3 x 1.5 mm², 1.5 KW, 16 Ampere, fault-current circuit breaker 30 mA, equipotential bonding to local standards. The bath tub must be connected by a qualified and competent professional.

6.2 Protective conductor

When protection class I equipment is used, the quality of the protective conductor of the installation is highly important. Please note that in this respect regulations and prescriptions have been specified in many countries by the national authorities.

WARNING: 	Risk of electrocution. In order to avoid the risk of electroshock, the device only must be connected to a power supply network with protective conductor.

6.3 First start-up

WARNING: 	The equipment is to be used exclusively in accordance with the accompanying documents. Only when these conditions are met, the manufacturer considers himself responsible for the impact on the safety, the reliability and the function of the device. In the event of a new connection of the COMPACT care tub, the technical data must be observed.
WARNING: 	To prevent scalding, the hot/cold water mixer must be set up in accordance with the local water supply prior to the first use. The settings must be documented.
CAUTION: 	In order to ensure a safe functioning and operation, we recommend a regular maintenance and set-up of the thermostatic mixer. These maintenance works are to be carried out by a qualified technician. Due to the relocation of the COMPACT care tub to another room either changes to the local water supply, a readjustment of the thermostatic mixer could be required.

7. Operating elements and their function

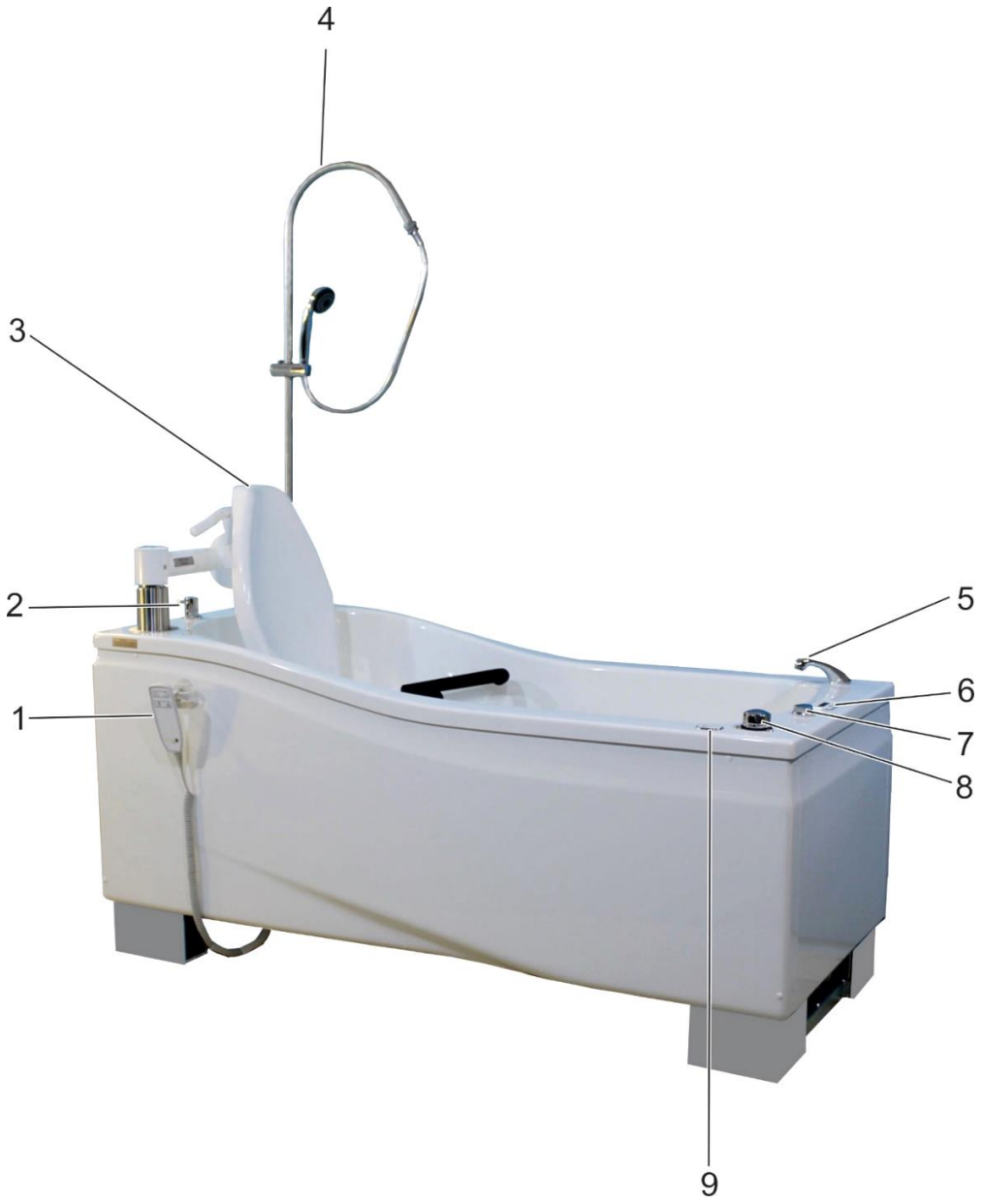

N°	Description	N°	Description
1	Handset	7	Water drainage
2	Hand shower valve (gantry*)	8	Water temperature thermostat - bath inlet
3	Patient chair	9	Water inlet/hand shower control panel (option)
4	Gantry* with hand shower	10	Temperature sensor
5	Tub inlet	11	Water outlet
6	Temperature indication (ref only)		

* The gantry ensures that the hand shower cannot fall into the bath water but is not always included especially in installations outside the UK.

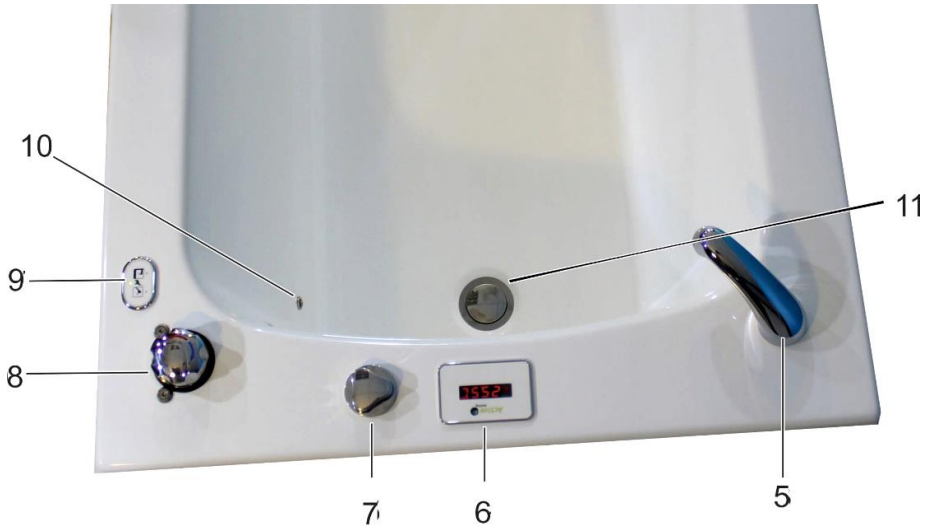

***Note**: The equipment of your tub could deviate from the images.*

7.1 Handset

7.1.1Handset - 2 buttons (COMPACT Fixed Height)

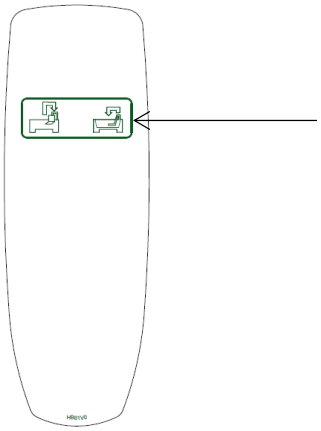

Button - patient chair in and out of the bath

7.1.2 Handset - 2 buttons (COMPACT Solo)

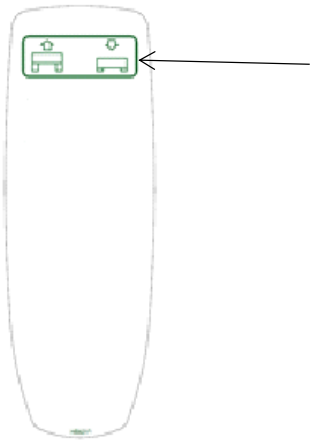

Button - tub up and down

7.1.3 Handset - 4 buttons (only COMPACT Plus and DCII)

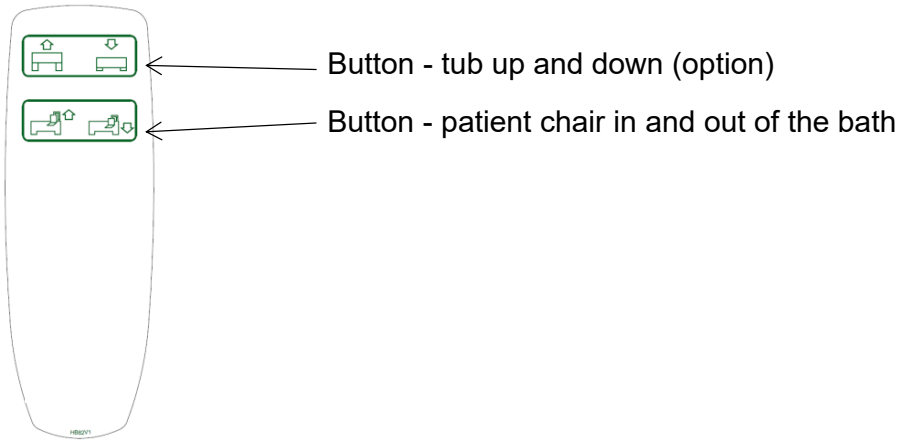

7.1.4 Unlocking the handset (only DC-versions)

To unlock the handset, you must **simultaneously** push both bottom buttons (button patient chair up and down) for approx. 5 seconds. Keep both buttons pressed until you hear a beep. The handset is now unlocked and you can release the buttons.



7.1.5 The height adjustment (COMPACT Plus and Solo)

By means of the buttons “Up” and “Down”, the height of the bath tub can be individually adjusted. If you press the “UP” button, the bath travels up. If you press the “DOWN” button, the bath travels down. When the end-of-travel positions are reached, the travel movement is automatically switched off.

Note: **To extend and retract the seat, the tub must be in bottommost position.**

7.2 Functions of the patient chair

Removing the armrests of the chair Turn the armrest of the chair so that it is positioned approx. in the middle between the sitting surface and the backrest. Now gently pull the armrest to find the point where the pin is released by the slot, as shown in the image aside. Then, the armrest can be easily pulled off. The armrest is fitted in reverse order.	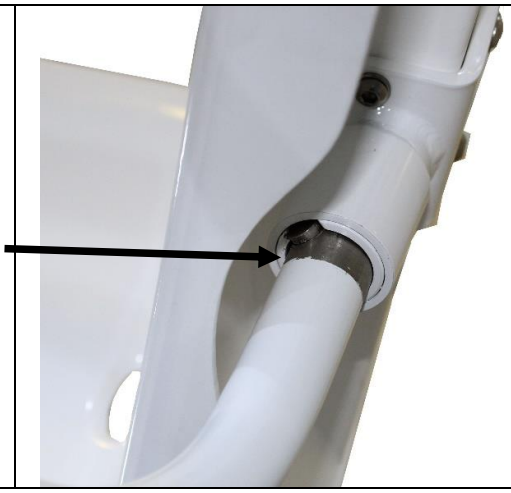
The armrests latch in the topmost or bottommost position. This provides for a smoother transfer of the patient.	
Install the patient onto the chair. When the patient sits on the chair, turn the armrests in the bottommost position. To secure the patient against falling during the movement of the chair, the waist belt must be fastened.	
Bring the belt around the patient and fix the belt to the fixture provided to that effect. Fasten the belt after fixing it to the fixture.	

7.3 Removable patient chair (option) and carrier for the patient chair (option)

If your COMPACT tub is optionally equipped with a removable patient chair, you can use an optionally available carrier for the patient chair to facilitate the transport of the patient/resident.

Note: The removable patient chair MUST be used in combination with the optionally available carrier.



You can use the patient chair in combination with the carrier to transport the patient to the care tub and to move him/her in the tub. When doing so, please also observe the following paragraphs: 7.6.1 Hooking the patient chair and 7.6.2 Unhooking the patient chair.

7.3.1 Hooking the patient chair:

Position the COMPACT tub in the bottommost position.

Image 1: Move the patient chair to the lifting column. Please make sure that the hook of the seat is located over the connecting tube. Please make sure that the red lever can engage.	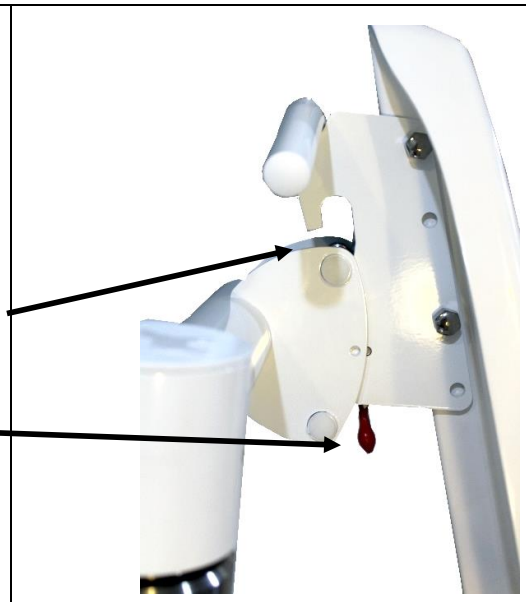
Image 2: Carefully raise the lifting column (button). Please make sure that the safety lock hooks into the column.	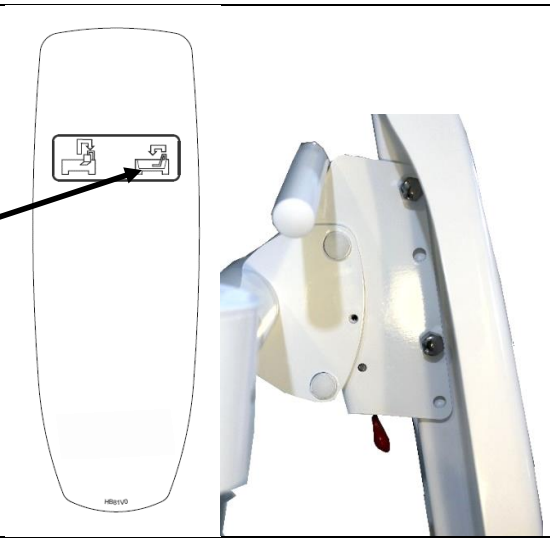

CAUTION:	To avoid possible damage, you must ensure that the carrier is no longer attached to the seat prior to introducing the seat into the tub

CAUTION:	Please detach the carrier only when the patient chair is securely fixed to the tub

Raise the patient chair (button ), so that the carrier is located slightly above the floor.

Image 3: To loosen the carrier from the patient chair: Pull the latch located at the rear of the carrier backwards.	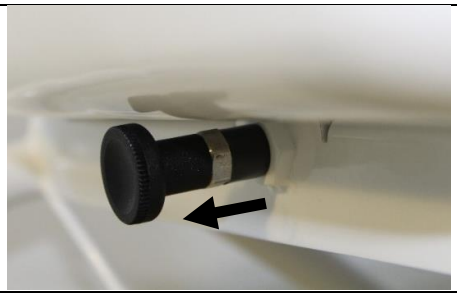
Image 4: Now, you can remove the carrier from the seat by pulling it either to the left or the right.	

Finally, the patient can be moved into the tub on the patient chair.

CAUTION:



Please observe that you will have to lift the patient's legs over the tub edge, if necessary!

7.3.2 Unhooking the patient chair:

Bring the patient chair out of the tub.

CAUTION:

Please observe that you will have to lift the patient's legs over the tub edge, if necessary!

Install the carrier to the patient chair:

Image 1: The carrier can be attached from either side (left or right) of the chair.	
Image 2: Slide the rails of the carrier into the rails of the patient chair as shown by the arrows.	

Image 3: The carrier audibly engages in the patient chair.	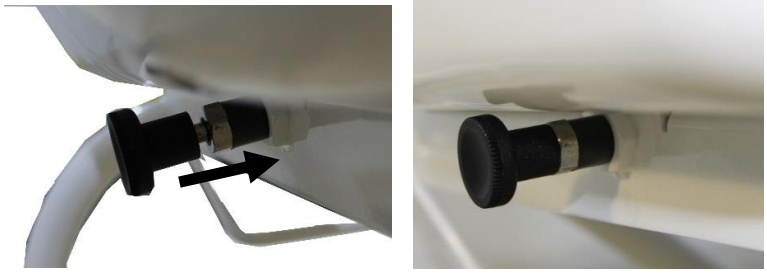

CAUTION:	Detach the patient chair from the tub only when the chair is safely and firmly engaged into the carrier.

Detaching the patient chair from the lifting column:

Image 4: The patient chair is fixed to the lifting column.	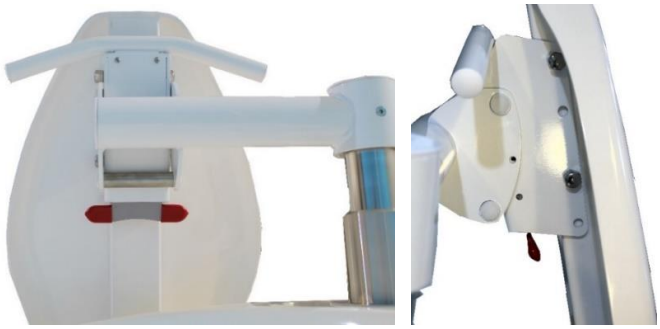
Image 5: To detach the chair, keep the red lever, located at the rear of the seat, pressed in the direction of the arrow.	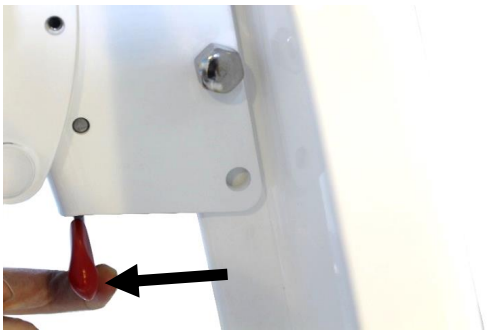
Image 6: Lower the lifting column (button) until the chair is standing autonomously (unhooked). You can release the red lever.	

You can wheel the patient chair away from the tub.



7.4 Thermostatic mixer (option)

Please consult separate mixer user manual.



Bath/Shower rotary/button control

Temperature rotary/button control

Turn the **Temperature rotary button control**, on the left, up to the stop to obtain an outlet temperature of 38°C / 100.4°F . The temperature is decreased by turning the rotary button clockwise.
You can increase the temperature by pressing the latch and turning the rotary button counter-clockwise. The temperature is limited to 43°C / 109.4°F max.

You can switch between tub filling and hand shower by turning the **Bath/Shower rotary button control** on the right. Your faucet features an Eco function. The flow rate of the hand shower is restricted. Press the latch and keep turning the rotary button counter-clockwise to increase the flow rate. The water volume is increased.

7.5 Battery backup

The COMPACT care tub is supplied with battery backup. This backup ensures that the patient can be lifted out of the tub one time in case of power failure. It is important that the supply voltage is always switched so as to charge the backup battery. Note: For Compact Solo this battery backup is only an option and not standard.

CAUTION:	The tub is equipped with an automatic voltage supply.
	In case of a power failure, you can lift the patient out of the tub one time by means of this voltage supply.
	The switch-over takes place automatically!

7.6 Optional functions

If your bath tub features functions such as a colour light therapy system, a sound system and/or an air spa system, please observe the individual enclosed user manuals as well.

8. Operation

CAUTION:



The temperature setting of the thermostat must be checked and set prior to the first use of the tub.

Please consult the enclosed user manual of your thermostat.

8.1 Prior to use

Please check the proper state and the functional safety of the system prior to use.

8.2 During use

Open the water inlet. Set the temperature by adjusting the temperature setting.

Close the water inlet when the water in the tub has reached the desired level.

WARNING:



Risk of Scalding.

Before the patient/resident steps into the tub, the water temperature must be checked manually (without wearing gloves) with a calibrated thermometer.

CAUTION:



The height adjustment of the patient chair can only be moved when the care tub is in the bottommost position.

CAUTION:



The tub is equipped with an automatic obstacle detection.

If the patient chair is blocked by an obstacle during the lowering procedure, the chair raises a little and the control is switched off.

After you have released the down button and removed the obstacle, you can proceed as usual.

CAUTION:



Please make sure that, when moving the chair over the tub edge, no body extremities of the patient (hand or foot) are jammed, thus injuring the patient.

CAUTION:



Please make sure to lift the patient's/resident's legs over the tub edge if necessary, when moving the patient/resident in or out of the care tub.

8.2.1 Moving the patient in the COMPACT Plus care tub (without removable patient chair)

Position the care tub in the bottommost position.

Press the button  of the handset until the tub has reached the lowest point. Once the end position is reached, the motor is automatically switched off.

Ask the patient to sit down on the patient chair or position the patient by means of a lift system.

Secure the patient as described in section 7.2.

After securing the patient, you can press the button  of the handset to move the patient chair with the patient sitting on it, into the tub.

Keep the button  pressed.

NOTE: *The chair automatically swivels over the tub; please make sure that the bather's legs are lifted over the tub edge.*

The chair automatically lowers into the tub.

The procedure can be interrupted at any time by releasing the button.

If the chair is in bottommost position (bathtub floor), the motor is switched off automatically. You now can release the button.

Set the tub to your working height 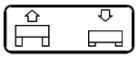**:**

You can raise the tub's height to your correct working height. (***Note****: The lifting bath tub can only be moved, when the patient chair is in the end position inside of the tub.)*

Press the buttons 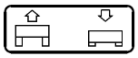 of the handset.

To raise the tub, keep the button  pressed until the desired height is reached.

Now, you can start bathing or caring for the patient/resident.

To lower the tub, keep the button  pressed until the desired height is reached.

To shower the patient, open the showering valve (option).

8.2.2 Moving the patient out of the COMPACT care tub

If the bathing process is finished, turn the central knob (water drain) to drain the water.

You can start towelling the patient, when they are still sitting comfortably in the care tub once the water is drained sufficiently.

Position the care tub in the bottommost position.

Press the button  of the handset until the tub has reached the lowest point. Once the end position is reached, the motor is automatically switched off.

Now, you can lift the patient out of the tub.

Keep the button  of the handset pressed.

The patient chair raises and the patient is lifted out of the tub with the chair; the chair is turned outward and lowered once it is outside of the tub.

NOTE: *The chair automatically swivels over the tub; please make sure that the legs are lifted over the tub edge.*

The procedure can be interrupted at any time by releasing the button.

If the chair is in bottommost position, the motor is switched off automatically. You now can release the button.

You can help the patient out of the chair or use a lift to lift them out of the chair. After that, you can prepare the tub for the next patient.

CAUTION:



Please make sure that the bath tub is always cleaned and rinsed prior to use it for the next patient.

9. Cleaning

CAUTION:



Make sure that the system is not in operation during the cleaning activities.

CAUTION:



After each treatment, the bath tub must be completely cleaned with a cleaning solution to avoid any cross-contamination.

CAUTION:



Only use the cleaning solution after the patient has left the bath tub.
Strictly respect and observe the manufacturer's instructions for the used cleaner.
Avoid direct contact with the concentrated product. If necessary, use gloves and safety glasses to protect your skin and eyes.

9.1 Cleaning the COMPACT

Clean the COMPACT care tub with a soft, lint-free cloth, moistened with soapy water or a standard plastic cleaner. Please do not use abrasives to clean the bath tub!

You must carefully clean and rinse your bath tub after each use to avoid the risk of transmission and infection. To manually clean the surface, an isopropyl alcohol solution or a customary disinfection aerosol (spray) can be used. The bath tub of the COMPACT care tub is made from glass-fibre reinforced plastic and can be cleaned with a surface cleaner (not aggressive).

To avoid damages, **no** aerosol cleaners, sprays, abrasive cleaners or solvents must be used to clean the control panel and the handset.

Please remember that all warranty claims regarding surface damage will not be accepted, if aggressive cleaning agents are used.

CAUTION:



The nozzles of the air spa must be cleaned after each use!
Please also consult the enclosed user manual to this effect.

9.2 Sterilising the COMPACT

The COMPACT care tub is **not** suitable for sterilization.

10. Checks/tests

In order to ensure a safe use of our COMPACT care tub and the protection of the users and the patients, Astor Bannerman prescribes an annual safety check.

The execution of the safety checks and maintenance must be documented and proven on request. Please use your inventory register to this effect.

We recommend a simultaneous maintenance of the device in order to conserve its full value.

The checks may only be conducted by adequately trained and qualified experts. The non-observance of this prescription could lead to injuries and jeopardise the safety of the product.

WARNING:



Risk of injury.
Do not conduct any cleaning, maintenance or test activities when the bath tub is in use. This could cause danger to the user and the patient.

The following checks and inspections of the care tub must be carried out:

Measures to be taken:	Daily	Weekly	Monthly	Annually
Complete functional test of the tub	√	√	√	√
Check of the water outlet temperature of the thermostatic mixer	√	√	√	√
Check of the drain system for damages and leaks		√	√	√
Check of the supply hoses for damages and leaks			√	√
Maintenance of the inner components of the thermostatic mixer (could be required sooner in case of hard water)				√
Setting of the water outlet temperature				√
Check of the emergency battery				√
Check of the floor fixations				√
Load test of the chair and the bath tub				√

11. Waste disposal

11.1 Disposal of the packaging material

Please recycle the packaging materials of the product in accordance with the locally applicable regulations and laws. The metal parts as well as the plastic and electronic components must be recycled in accordance with the WEEE.

11.2 Disposal of the product

The expected service life of the care tub is approx. 8 years. At the end of the product's lifetime, please recycle responsibly:

- The steel frame is widely recycled.

- The electronic components should be recycled in accordance with local WEEE regulations.

For further advice, please contact Astor Bannerman:

email our support team: support@astorbannerman.co.uk

or call us on: +44 (0)1242 820820

Please clean and disinfect the product prior to its disposal.

11.2.1 Battery

The battery is recyclable and must be delivered to disposal centres provided to that effect.

12. Troubleshooting For Maintenance Team (Qualified)

Issue	Check / Possible Remedy
The height adjustment of the lifting bath tub is not working.	a) Check if the mains voltage is present. b) Check the connections between the control system and the control panel. c) Check the control panel for damages. d) Check the cables for damages. e) The chair is not in the end position (inside).
The chair cannot be moved	a) Check if the mains voltage is present. b) Check the connections between the control system and the control panel. c) Check the control panel for damages. d) Check the cables for damages. e) The chair is not in the end position (bottom).
The patient chair stops during the downward movement/lowering process	Check if there is an obstacle between the patient chair and the bathtub floor or the floor.
The lifting bath tub remains in the top end position.	Check if the mains voltage is present.
The lifting device does not function.	Check if the mains voltage is present.
The drive is switched off during the lifting procedure.	Check that the maximum load is not exceeded (**see appendix for maximum working loads**)
Mains voltage fails.	a) Check the fuse and the fault current circuit-breaker (FI-switch). b) Check the cables for damages.
The water does not flow.	a) Check the shut-off valves of the cold and hot water. b) Check the filter in the water inlet. c) For the DC-version, check if the control system is unlocked (7.1.4).
Only hot or cold water flows out of the faucet.	a) Check if the hot and cold-water connection are reversed (locally, tub). b) Check the filter and the inlet and outlet taps for clogging. c) Check if the ball valves are opened.

The water flow rate is too low.	a) Check the filter and the inlet and outlet taps for clogging. b) Check that the flow rate is sufficient for the supply conditions. c) Check if the connecting hoses are buckled.
The faucet leaks water.	Check the seals for damages, replace seals if necessary.
The water flows away during the bathing process.	a) Check the water plug and readjust the screw of the water plug if necessary. b) Check the seal for dirt and damages.
The bathing water does not flow away.	a) Check the water plug and readjust the screw of the water plug if necessary. b) Check the seal for dirt and damages.
The care tub produces unusual noises.	Contact the after-sales/customer care service.
The care tub is damaged.	Contact the after-sales/customer care service.

If your lifting bath tub does not function properly and you cannot eliminate the error by means of the remedies listed in paragraph 12 please contact our after-sales team.

astor bannerman beyond routine	Astor Bannerman The Elephant Works, Andoversford Link, Cheltenham, GL54 4LB Phone: +44(0)1242 820820 support@astorbannerman.co.uk

13. Appendix

13.1 Technical data

Dimensions and weights		
- Length:	160 cm or 170 cm	62.9 or 66.9 inches
- Width:	75.0 cm	29.5 inches
Width with extended chair:	142 cm	55.9 inches
- Min. stroke height:	78.0 cm	30.7 inches
- Max. stroke height:	108.0 cm	42.5 inches
- Weight without water (160 cm):	approx. 118 kg / 260 lb	
- Weight without water (170 cm):	approx. 133 kg / 293 lb	
- Filling capacity 170 cm (without patient):	approx. 215 l / 47.3 gallon	
- Filling capacity 160 cm (without patient):	approx. 195 l / 42.9 gallon	
- Patient weight (possible lifting capacity seat):	max. 150 kg / 330 lb	
- SWL (safe workload 160 cm):	478 kg / 1053 lb (product, patient and water)	
- SWL (safe workload 170 cm):	508 kg / 1120 lb (product, patient and water)	
Electrical data		
- Applied part:	Type B	
- Protection class:	I	
- Power connection:	230 V, 50 Hz	
- Power consumption:	Max. 1.25 kW	
- DC output:	24V, 8A	
- Operating mode:	Short-term operation	
- Duration of treatment:	10%, max. 2 min on & 18 min off	
- Noise Level	LAeq 56.2 dB	
Ambient conditions		
- Temperature range:	10 °C to 40 °C / 50 °F to 104 °F	
- Relative humidity:	30% to 95%, non-condensing	
- Atmospheric pressure:	800 – 1060 hPa	
Water pressure:		
Minimum:	1 bar (cold and hot water connection)	
Maximum:	5 bar (cold and hot water connection)	
The pressure should be identical for both lines!		
Storage and transport		
- Temperature range:	5 °C to 70 °C / 41 °F - 158 °F	
- Relative humidity:	10% to 80%, no condensation at 20°C / 68°F	
- Atmospheric pressure:	50kPa – 106 kPa	

(62.9 / 66.9")

13.2 Dimensions of the COMPACT care tub

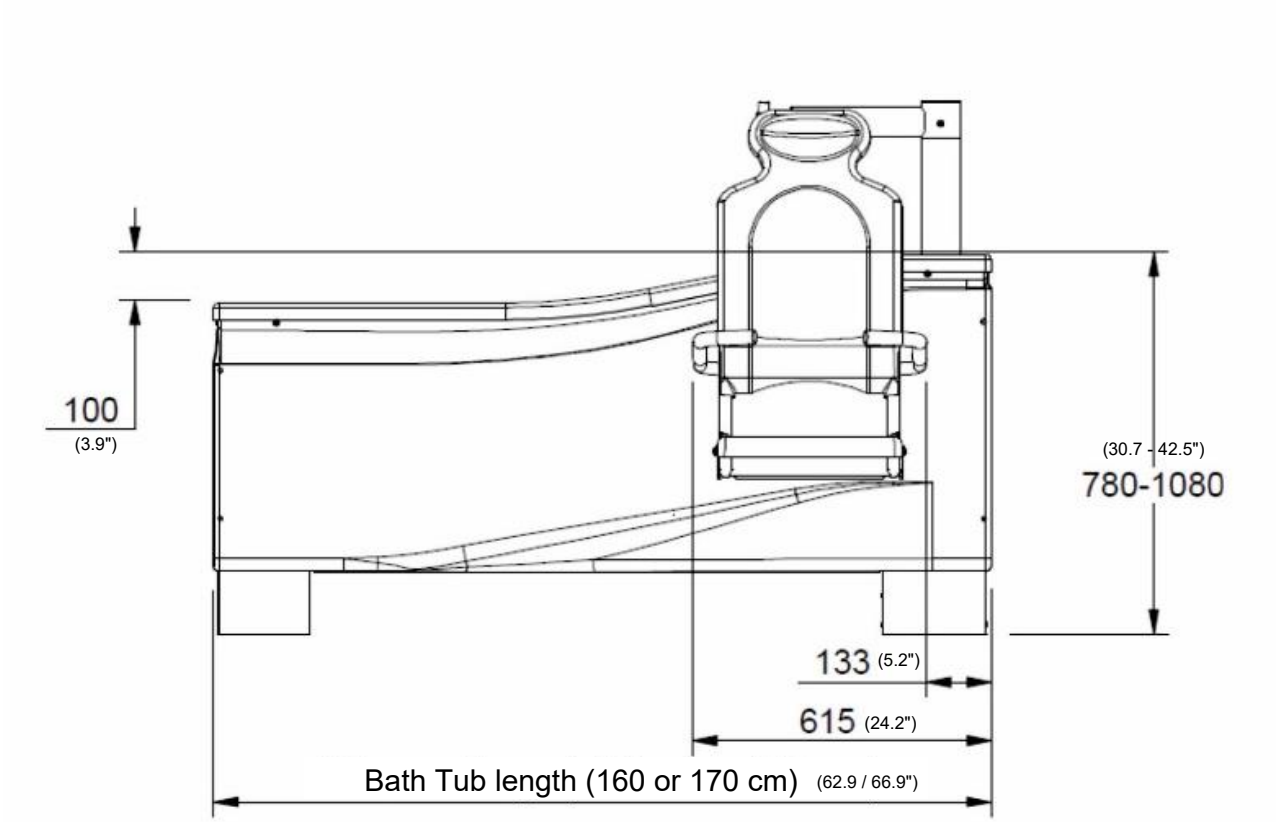

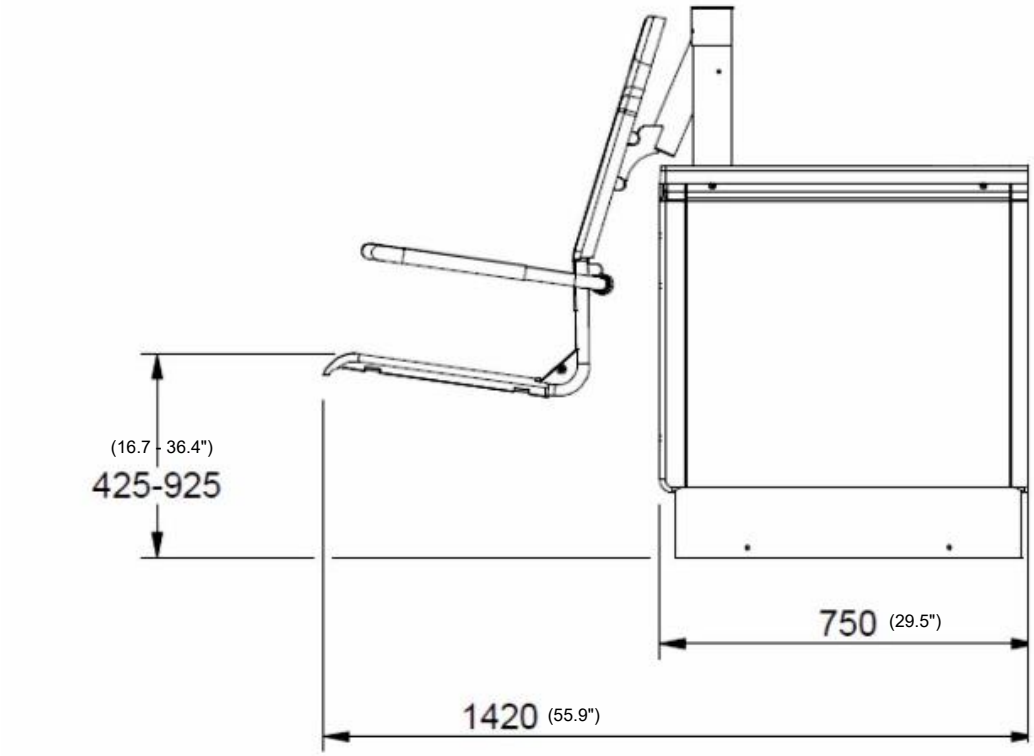

13.3 Spare Parts

Description
Gantry system
Air jet whirlpool system
Music sound system
Bluetooth sound system
Colour light system
Armrests (set)
Trolley for removable seat
Emergency function in case of power failure
Compact 16 long LHS side panel
Compact 16 long RHS side panel
Compact 17 long LHS side panel
Compact 17 long RHS side panel
Compact tail panel (foot end)
Compact tail panel (seat end)
Compact 16 side panel for LHS lift access
Compact 16 side panel for RHS lift access
Compact 17 side panel for LHS lift access
Compact 17 side panel for RHS lift access

Spare parts or consumables are available upon request from Astor Bannerman.

Please note:
Replacement or exchange of spare parts requires the knowhow of a qualified electrician/sanitary specialist, and must be carried out by such qualified person.

13.4 Electromagnetic Compatibility

Electrical medical equipment is subject to special precautionary measures with regard to EMC and must be installed and operated in accordance with the EMC instructions included in the accompanying documents.

For devices and systems from Astor Bannerman, no special measures must be observed.

Portable and mobile HF-communications equipment can interfere with electrical medical equipment.

Guidance and manufacturer's declaration - electromagnetic immunity (Table 201)		
The COMPACT been designed for use in the following listed ELECTROMAGNETIC ENVIRONMENTS. The customer or the user of the COMPACT must ensure that the appliance is used in such environment.		
Emission measurements	**Compliance**	**Electromagnetic environment - guidelines**
High-frequency (HF) emissions to CISPR 11	Group 1	The COMPACT uses HF radiation exclusively for internal functions. Therefore, the HF radiation of the device is very low and any interference with adjacent electrical equipment is unlikely.
High-frequency (HF) emissions to CISPR 11	Class B	The COMPACT is intended for use in any type of facility including living quarters and those that are directly connected to a public mains network that supplies residential buildings and buildings used for domestic purposes.
Harmonics to IEC 61000-3-2	Class A	
Voltage fluctuations/ flicker to IEC 61000-3-3	Compliant	

Guidance and manufacturer's declaration - electromagnetic immunity (Table 202)			
The COMPACT been designed for use in the following listed electromagnetic environment. The customer or the user of the COMPACT must ensure that the appliance is used in such environment.			
Immunity testing	**IEC 60601- Test level**	**Compliance level**	**Electromagnetic environment guidance**
Discharging of static electricity (ESD) to IEC 61000-4-2	± 6kV contact discharge ± 8kV air discharge	± 6kV contact discharge ± 8kV air discharge	The floor must be in wood, concrete or ceramic tiles. In case of floors in synthetic material, the relevant air humidity must be at least 30%.
Rapid transient Interference pulses/burst IEC 61000-4-4	± 2 kV for power supply cables ± 1 kV for input/output cables	± 2 kV for power supply cables not applicable to input/ output cables	The quality of the supply voltage should match that of a typical business or hospital environment.
Overvoltage IEC 61000-4-5	±/1 kV cable against cable ±/2 kV cable against ground connection	±/1 kV cable against cable ±/2 kV cable against ground connection	The quality of the supply voltage should match that of a typical business or hospital environment.
Voltage drops, short interruptions and voltage fluctuations in the power supply input cables IEC 61000-4-11	<5 % U_T (>95 % drop of U_T) for 0.5 period <40 % U_T (>60 % drop of U_T) for 5 periods <70 % U_T (>30 % drop of U_T) for 25 periods <5 % U_T (>95 % drop of U_T) for 5 s	<5 % U_T (>95 % drop of U_T) for 0.5 period <40 % U_T (>60 % drop of U_T) for 5 periods <70 % U_T (>30 % drop of U_T) for 25 periods <5 % U_T (>95 % drop of U_T) for 5s	The quality of the supply voltage should match that of a typical business or hospital environment.
Current frequency (50/60 Hz) Magnetic field IEC 61000-4-8	3 A/m	3 A/m	Power frequency magnetic fields should be at levels characteristic of a typical location in a typical business or hospital environment.
CAUTION U_T is the mains AC voltage before the application of the test level.			

Guidance and manufacturer's declaration - electromagnetic immunity (Table 204)

The COMPACT been designed for use in the following listed electromagnetic environment. The customer or the user of the COMPACT must ensure that the appliance is used in such environment.

Immunity testing	IEC 60601-Test level	Compliance level	Electromagnetic environment guidance
Conducted HF IEC 61000-4-6	3 Vrms 150 kHz up to 80 MHz	10 Vrms	Portable and mobile HF communications equipment should be used no closer to any part of the COMPACT including cables, than the recommended separation distance calculated in accordance with the equation applicable to the frequency of the transmitter. **Recommended separation distance** $d=0.35\sqrt{P}$
Radiation HF IEC 61000-4-3	3 V/m 80 MHz up to 2.5 GHz	3 V/m	$d=1.2\sqrt{P}$ 80 MHz up to 800 MHz $d=2.3\sqrt{P}$ 800 MHz up to 2.5 GHz With *P* as the rated output of the transmitter in Watt (W) in accordance with the manufacturer's specifications and *d* as the recommended separation distance in meter (m). The field strength of fixed HF-transmitters as determined by an electromagnetic field survey, [a] – should be less than the COMPLIANCE LEVEL in each frequency range. [b] In the vicinity of equipment marked with the following symbol, interference may occur: 

NOTE 1: At 80 MHz and 800 MHz, the higher frequency range applies.

NOTE 2: This manual could possibly not apply to all situations. Electromagnetic propagation is affected by absorption and reflection from structures, objects and people.

[a] The field strength of fixed RF transmitters, such as base stations of mobile phones and land mobile radios, amateur radio stations, AM and FM radios as well as radio and television broadcast media cannot be predicted theoretically with accuracy. To assess the electromagnetic environment due to fixed RF transmitters, an electromagnetic site survey is recommended. If the field strength measured in the environment where the COMPACT is to be used, exceeds the applicable HF compliance level, special care should be taken that a normal operation of the COMPACT can be guaranteed. In case anomalies are identified, additional measures could be required, such as a different alignment or a change of the location of the COMPACT.

[b] In the frequency range from 150 kHz to 80 MHz, the field strength must be less than 10 V/m.

Recommended distance between portable and mobile communications equipment and the COMPACT (Table 206)

The COMPACT is intended for use in an electromagnetic environment with controlled HF interferences. The customer or the user of the COMPACT can avoid electromagnetic interference by respecting and observing the minimum distance between portable and mobile HF telecommunication devices (transmitters) and the COMPACT depending on the rated output of the communication device as given below.

Rated output of the transmitter W	**Separation distance depending on the transmitting frequency** in m		
	150 kHz to 800 MHz d=0.35√P	**80 MHz to 800 MHz** d=1.2√P	**800 MHz to 2.5 GHz** d=2.3√P
0.01	0.04	0.12	0.23
0.1	0.11	0.38	0.73
1	0.35	1.2	2.3
10	1.1	3.8	7.3
100	3.5	12	23

For transmitters rated at a maximum output power not listed above, the recommended separation distance *d* in meters (m) can be determined using the equation applicable to the frequency of the transmitter, where *P* is the maximum output power rating of the transmitter in watts (W) according to the specifications given by the transmitter manufacturer.

NOTE 1: At 80 MHz and 800 MHz, the separation distance for the higher frequency range applies.

NOTE 2: These guidelines could not apply to all situations. The dispersion of electromagnetic waves is affected by absorption and reflection from structures, objects and persons.

13.5 Journal

According to the Medical Device Regulations and Directive, you are compelled to keep a journal for this device. You can use this journal as template.

Journal

Device: COMPACT

Manufacturer: **Astor Bannerman**, The Elephant Works, Andoversford Link Cheltenham, GL54 4LB
* see label / rating plate and delete as appropriate

Serial number: _____

Date of purchase: _____

Site: _____

Checks and inspection conducted upon the first use:

_____

Date: _____

Evidence of the training session on the functions and the use of the product

Instructor		**Trained person**	
Name	Date	Name	Signature

Periodic inspection, repair, safety check, etc.

Type of inspection	Date	Result	Measure	Signature:

Your notes:

Your notes:

Your notes:



Astor Bannerman ●The Elephant Works, Andoversford Link, Cheltenham GL54 4LB
+44(0)1242 820820 ● support@astorbannerman.co.uk