Product Specification Sheet:

Astor CTE3-CP Wall Mounted Changing and Showering Table



Highlights:

- Changing Places Compliant
- Height adjustable to give safe and comfortable carer working height
- Suitable for use in shower areas
- Durable non-rip high tension vinyl stretcher - comfortable and easy to clean
- 200 kg maximum working load
- 800 mm wide stretcher

The Astor CTE3-CP has been specifically developed as a Changing Places compliant version of the popular Astor CTE3 Nivano. It is simple to operate via a handset control, and is a comfortable, reliable and sleek choice.

The durable stretcher material is comfortable as well as quick and easy to clean. This, along with stainless steel construction gives many years of worry free use, even in wet and humid or multi-user environments.

The 600 mm travel range enables the user to be gently lifted to a safe and comfortable working height for washing, showering, changing and dressing. The platform stows neatly when not in use, held in place with twin gas struts, and features battery back-up for safe lowering in the event of a power failure.

The 200 kg maximum working load and 800 mm wide mattress comply with the Changing Places requirement for a Changing Table.



Standard Features:

- 200 kg /31.5 st maximum working load
- Height range 375 mm - 975 mm (600mm)
- Height adjustable (mains electric)
- Handset operation
- Fold away safety guard
- Battery backup
- Floor and ceiling hoist access
- Stainless steel construction - rust free
- Durable non-rip high tension vinyl stretcher
- Protrudes just 242 mm from wall when stowed
- 3 Year warranty *(Terms and conditions apply)*

Optional Extras:

- Range of service & maintenance packages

Product Specification Sheet:

Astor CTE3-CP Changing & Showering Table

Model Name:	**Astor CTE3-CP**
Product Description	Wall mounted changing and showering table
Product Code	00.038.19.1800
Mattress Size	1800 mm x 800 mm
Height Range	375 mm - 975 mm (600 mm)

Features:

- Height Adjustable
- Mains Electric
- Backup (Battery)
- MWL 200 kg (200kg/ 31.5st MWL)
- 3 Year Warranty (3 Year Warranty)

Options:

- Service Packages

Application:

- Changing Places
- School
- Leisure Centre
- Respite Home
- Hospital

Technical Drawings:

All dimensions in mm:

REAR VIEW

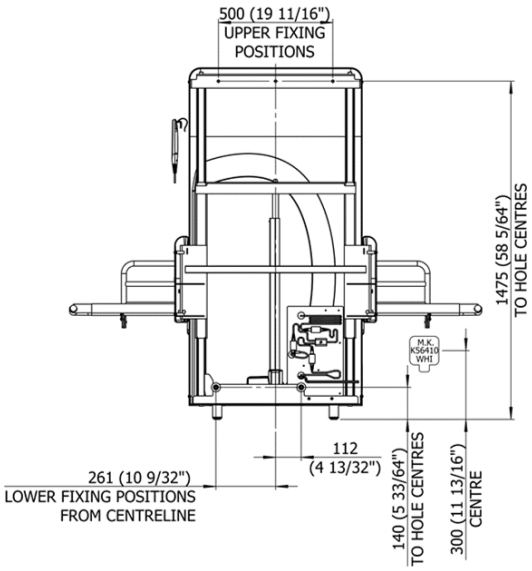

FRONT VIEW

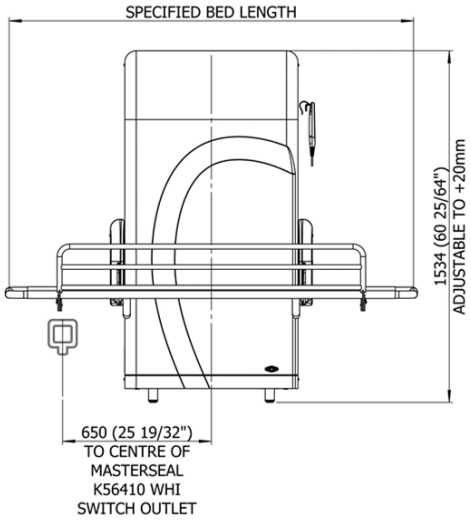

SIDE VIEW

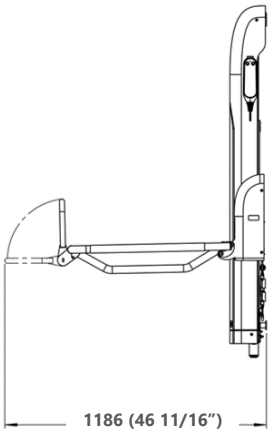

Astor Bannerman, Andoversford Link, Cheltenham GL54 4LB
sales@astorbannerman.co.uk **01242 820820** www.astorbannerman.co.uk