Astor CTE3 Nivano
Astor CTE3 Nivano Max
Astor CTE3 - CP

Height Adjustable Changing Table

Installation and User Guide



50.038.08.0004 (Rev5)

Contents

1 Information 3

2 Product labels 4

3 CTE3 Varients 5

4 Warranty 6

5 Regular checks 7

6 Finding your way around the product 8

7 Instructions for Use 9

- **7.1** Daily Checks 9
- **7.2** Preparing for Use 9
- **7.3** How to Stow the Stretcher 9
- **7.4** Adjusting the Height 10
- **7.5** Using the Guard 11

8 Cleaning 12

9 Troubleshooting 13

10 Technical specification 14

11 Product dimensions 15

12 Installation 16

- **12.1** Pre-Installation Overview 16
- **12.2** Connecting the Battery 17
- **12.3** Connecting the Power Outlet 18
- **12.4** Fitting the SBU to the wall 19
- **12.5** Installing the Handset and Front Cover 20
- **12.6** Fit the stretcher 23
- **12.7** Testing 23
- **12.8** Mounting the Wall Sign 24

13 Moving & transporting the equipment 25

14 Product disposal 25

15 Replaceable parts 25

16 Appendix 26

- **16.1** Standard symbols 26

17 Service record 28

18 Training record 29

1 Introduction

The Astor CTE3 height adjustable changing table is a wall mounted showering and changing table. A front guard is integrated for safety.

The height adjustable changing table is powered by a 110 - 240 V control system with battery backup. The battery enables the lowering of the changing table in the event of mains electrical supply failure. It is essential that mains electrical power is switched on at all times to maintain the charge of the backup batteries.

Intended use

No formal training is required to use the CTE3, but users must read and understand the user guide. To aid usage, a quick user guide should be clearly displayed on the wall at all installations.

CAUTION: Before installing or using this equipment you must read and fully understand these instructions.

The product is intended to be used by people trained or experienced in healthcare for a family member or client that:

- needs to be changed or cleaned in a lying position
- is older and/or larger than a child able to use a standard baby changing facility
- is likely to require a hoist to transfer to the changing table

Other than the weight of the patient using the changing table, there are no known contraindications associated with this device.

The maximum working load is up to 150 kg (330 lbs) for CTE3 Nivano, up to 200 kg (440 lbs) for CTE3-CP and up to 220 kg (485 lbs) for CTE3 Nivano Max. The recommended position for use of this equipment is shown in Fig 1.

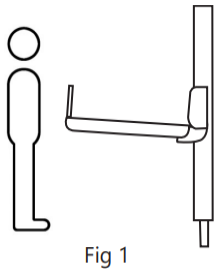

Fig 1

Operating environment

The CTE3 is designed for use in private homes, changing places toilets, schools and other public spaces. However, it could be used in any indoor facility at room temperature.

2 Product labels

The labels shown below are labels that will be placed on your CTE3.

See Section 6 for where the labels are positioned on your product.

See Appendix for full explanation of the symbols.

The reference number identifies the model of your product.

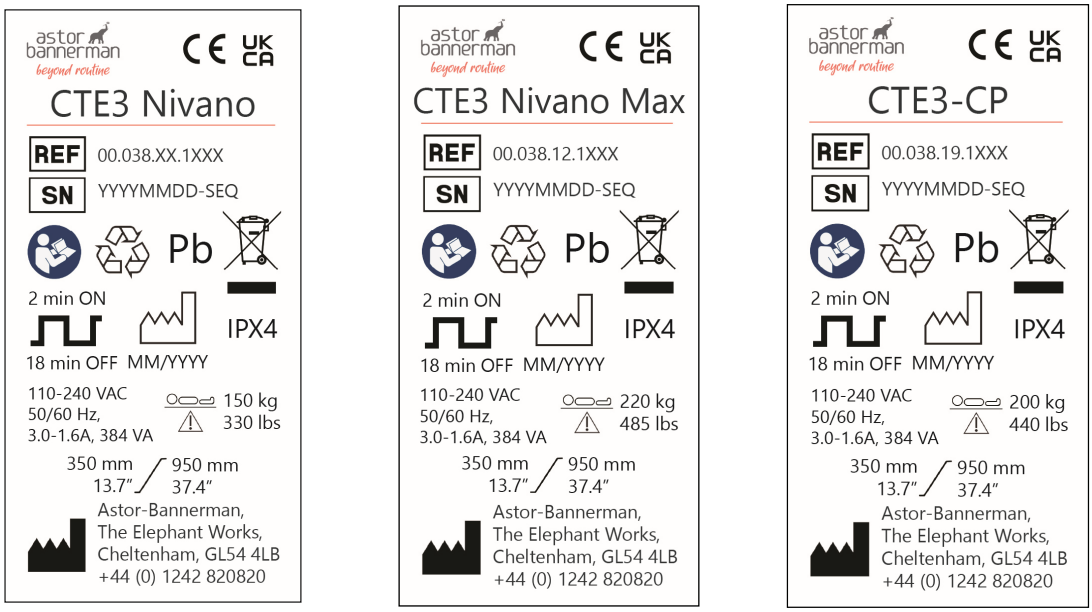

Fig 2a Product Labels

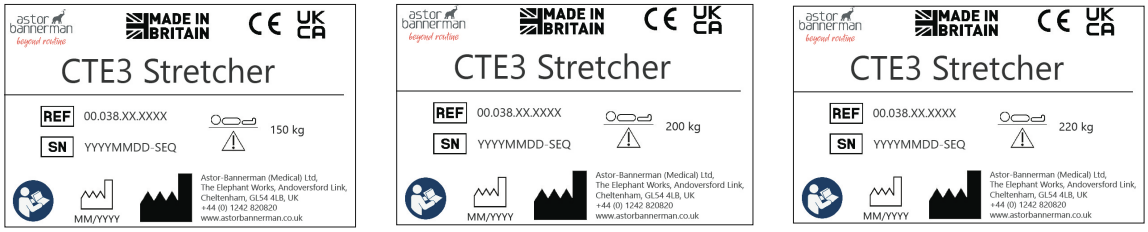

Fig 2b Stretcher Labels

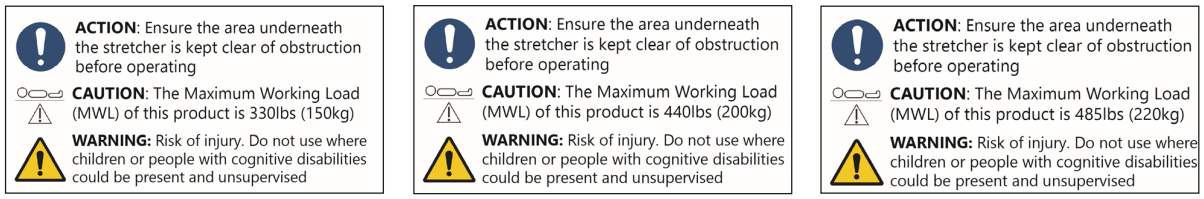

Fig 2c Front Cover Labels



Fig 2d Pod Label



Fig 2e UL Listing Label

3 CTE3 Variants

CTE3 Nivano - 150kg SWL	
00.038.11.1230	CTE3 Nivano Changing Table 1200 x 700 mm (47 x 27 inches)
00.038.11.1330	CTE3 Nivano Changing Table 1300 x 700 mm (51 x 27 inches)
00.038.11.1430	CTE3 Nivano Changing Table 1400 x 700 mm (55 x 27 inches)
00.038.11.1530	CTE3 Nivano Changing Table 1500 x 700 mm (59 x 27 inches)
00.038.11.1630	CTE3 Nivano Changing Table 1600 x 700 mm (62 x 27 inches)
00.038.11.1730	CTE3 Nivano Changing Table 1700 x 700 mm (66 x 27 inches)
00.038.11.1830	CTE3 Nivano Changing Table 1800 x 700 mm (70 x 27 inches)
00.038.11.1930	CTE3 Nivano Changing Table 1900 x 700 mm (74 x 27 inches)
CTE3 Nivano with BACK TILT on LEFT - 150kg SWL	
00.038.20.1730	CTE3 Nivano Changing Table 1700 x 700 mm (66 x 27 inches) with Back Tilt on LEFT
00.038.20.1830	CTE3 Nivano Changing Table 1800 x 700 mm (70 x 27 inches) with Back Tilt on LEFT
00.038.20.1930	CTE3 Nivano Changing Table 1900 x 700 mm (74 x 27 inches) with Back Tilt on LEFT
CTE3 Nivano with BACK TILT on RIGHT - 150kg SWL	
00.038.20.1731	CTE3 Nivano Changing Table 1700 x 700 mm (66 x 27 inches) with Back Tilt on RIGHT
00.038.20.1831	CTE3 Nivano Changing Table 1800 x 700 mm (70 x 27 inches) with Back Tilt on RIGHT
00.038.20.1931	CTE3 Nivano Changing Table 1900 x 700 mm (74 x 27 inches) with Back Tilt on RIGHT
CTE3 Nivano Max - 220kg SWL	
00.038.12.1730	CTE3 Nivano Max Changing Table 1700 x 700 mm (66 x 27 inches)
00.038.12.1830	CTE3 Nivano Max Changing Table 1800 x 700 mm (70 x 27 inches)
00.038.12.1930	CTE3 Nivano Max Changing Table 1900 x 700 mm (74 x 27 inches)
CTE3-CP - 200kg SWL (For Changing Places Toilets and Public Spaces)	
00.038.19.1830	CTE3-CP Changing Table 1800 x 800 mm (70 x 27 inches)
00.038.19.1930	CTE3-CP Changing Table 1900 x 800 mm (74 x 27 inches)

4 Warranty

Once registered, this product has a 3 year warranty against all defects in manufacture. This does not affect your statutory rights.

To **validate your warranty** and for full terms and conditions, please register your product and your details immediately:

online at: www.astorbannerman.co.uk/services
email our support team: support@astorbannerman.co.uk
or call us on: +44 (0)1242 820820

This warranty is provided by Astor Bannerman to the registered Customer.

Equipment requiring commissioning must be commissioned for this warranty to be valid.

To maintain the warranty, the equipment must be serviced at least on an annual basis by a competent, factory trained technician. Service or repairs undertaken by persons other than competent qualified technicians will invalidate this Warranty.

This product has been designed using quality components and tested under standard usage conditions to give a 10 year service life based on regular servicing and average usage patterns and conditions. This does not alter the warranty offered.



5 Regular Checks

In order to ensure the continued safe use of the equipment, regular safety checks and servicing must be completed. A safety check and service record of the product must be maintained. Please ensure the service record at the back of this document is kept up to date.

We recommend the on-going maintenance and servicing of this changing table to conserve its longevity. The checks may only be conducted by competent technicians. The non-observance of this could lead to injuries and jeopardise the safety of the product.

DO NOT: Carry out these checks or complete a service when a person is on the stretcher

Carry out the following checks:	**Start up:**	**Monthly**	**Every 6 months**	**Annually**
Disinfect unit	✓			
Clean stretcher	✓			
Check stretcher is damage free	✓			
Check that there is no play in the stretcher (does not move or wobble)	✓			
Rise and fall: full function test of the equipment; smooth; no unusual noise		✓		
Check guard locks securely / unlock smoothly		✓		
Check guard rotates freely once unlocked		✓		
Corrosion: inspect the unit for any signs of corrosion		✓		
Cables: check that all cables from the power supply/control unit are securely fitted and show no sign of damage		✓		
Fixings: inspect all visible nuts, bolts etc. to see they are secure		✓		
Check the stretcher angle has not changed when the stretcher is deployed. Stretcher should not be leaning towards the floor. If so, arrange a service.		✓		
LOLER test* (to be completed by a service engineer)			✓	
Service** (to be comepleted by a service engineer)				✓

*LOLER testing applicable to products used with the UK. Please follow all applicable local regulations.

**To maintain your warranty, and for your safety, this product should be fully serviced by a competent technician.

Astor Bannerman will make available on request circuit diagrams, component part lists, descriptions, calibration instructions, or other information that will assist service personnel to repair those parts of the equipment that are designated by the manufacturer as repairable by competent technician.

For further information on servicing offered by Astor Bannerman, contact: service@astorbannerman.co.uk.

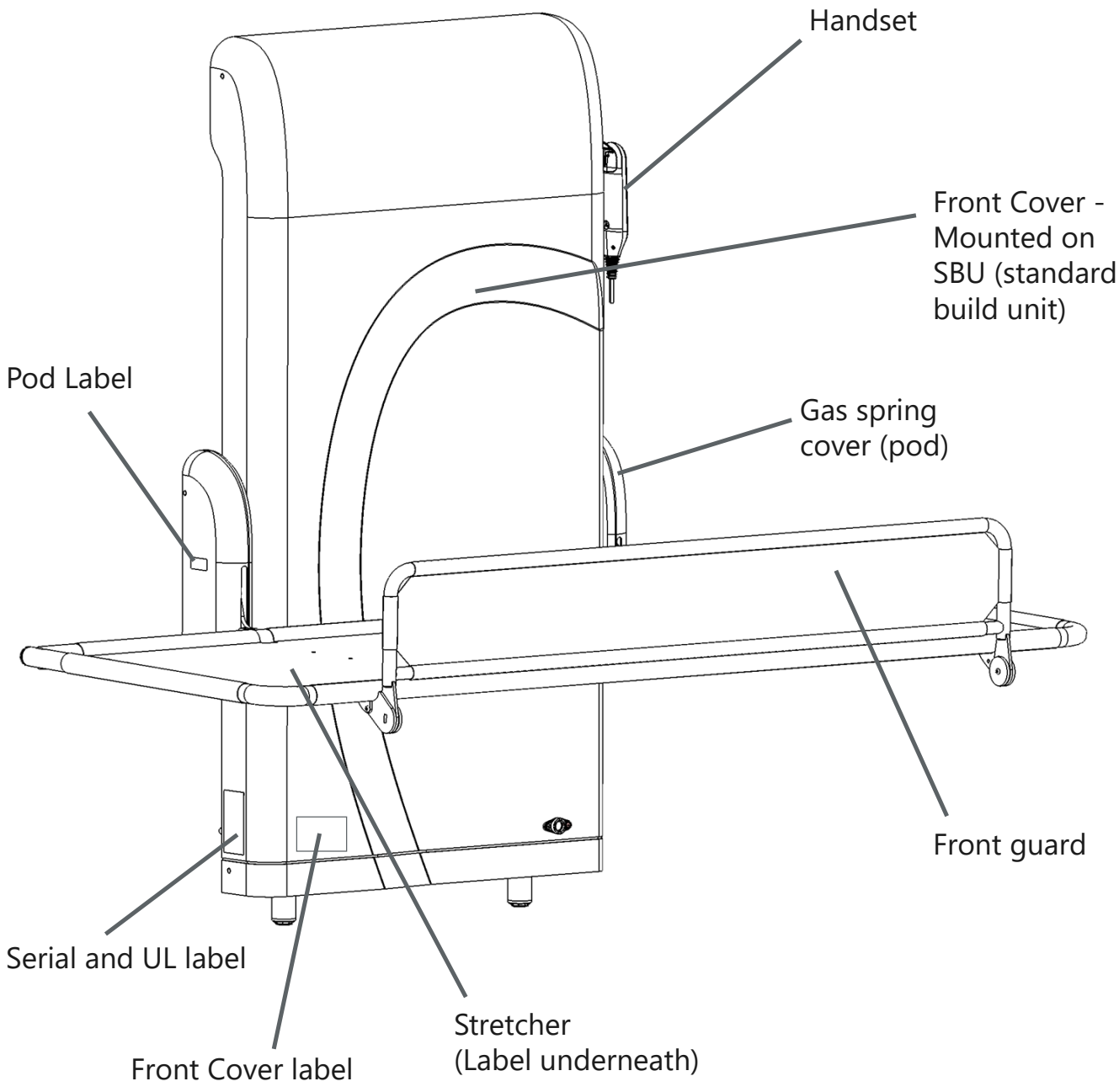
Handset
Front Cover - Mounted on SBU (standard build unit)
Pod Label
Gas spring cover (pod)
Front guard
Serial and UL label
Front Cover label
Stretcher (Label underneath)

Fig 6

7.1 Daily Checks

Carry out the following checks daily before using the changing table

- Check the weight of the client and ensure the equipment is rated for the weight to be lifted.
- Check the mains electrical supply is connected and turned on.
- Check there are no obstructions or items that may be trapped when the changing table is operated.
- Check that the changing table will raise and lower using the handset.
- Check that the fabric of the stretcher is intact.

7.2 Preparing for use

The changing table is held in the stowed position by gas springs. There is no release mechanism to operate before deploying the bed.

To move the bed from the stowed position:

- Place your hand on the top edge of the bed.
- Pull gently forward and the bed will begin to rotate down.
- During the rotation, the bed will gain a little momentum, so position your hand underneath to aid it lowering slowly down.

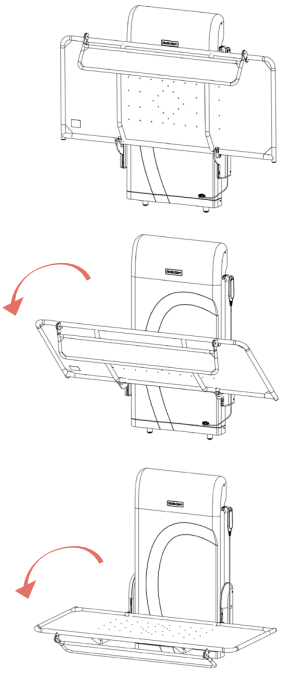

Fig 7.2

7.3 How to stow the stretcher

The changing table is held in the stowed position by gas springs.

- Stow the guards as shown in Section 7.5
- Place your hand on the underside of the stretcher
- Pull gently upwards and the stretcher will begin to rotate up.
- During the rotation the bed will gain a little momentum, so position your other hand on the end on the stretcher to control the movement safely.

ACTION: Ensure the area around the stretcher is kept clear of obstructions before operating to prevent risk of injury.

CAUTION: Keep clear of moving parts when stretcher is being raised or lowered.

7.4 Adjusting the height

The changing table is operated with a handset control.

- Pressing either of the top buttons will either raise or lower the changing table to the desired height.
- Use the raise/lower buttons to position the table at the most convenient height to transfer the client. Then adjust the height again to the best height to care for the client without causing back strain.

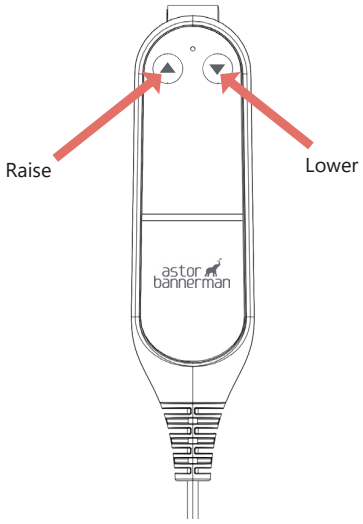

Fig 7.4

WARNING: Risk of injury by crushing. Ensure the area underneath the stretcher is kept clear of obstructions before operating. Keep clear of the area above the stretcher when stowing.

CAUTION: Keep clear of moving parts when operating. Ensure there are no obstructions when moving the guards into position.

ACTION: Always deploy the guards before moving the changing table with a person on the stretcher.

ACTION: Ensure the area underneath the stretcher is clear of obstructions before operating.

ACTION: Keep fingers clear of moving parts before operating.

7.5 Using the guard

The CTE3 changing table is fitted with a front guard which can be stowed under the stretcher.

ACTION: Always deploy the guard before moving the changing table with a person on the stretcher.

WARNING: Risk of falling. Stretcher occupant must never be left unattended.

To deploy the front guard

- Reach underneath the bed and take hold of the guard.
- Lift to unlock the guard in the direction of Arrow 1. Take care not to let go as it may swing around on its own.
- Rotate the guard forward and up into position, Arrows; 2, 3 and 4.
- Once upright, the guard will be able to drop down into its location and lock into place.

To stow the guard

- Lift the guard up until it can be rotated back towards you, Arrow 5.
- Rotate the guard down and back underneath the stretcher, Arrow 6.
- Push the guard up underneath the bed until it slots into its locked position.

CAUTION: Ensure there are no obstructions while moving the guard into position.

Optional - Using a Tilted Backrest

- Position the backrest before transferring the client.
- Lift the backrest up to the desired position and ensure the support bar is locked securely into place.
- If it is no longer required, sit the client forward before stowing back into the flat position.

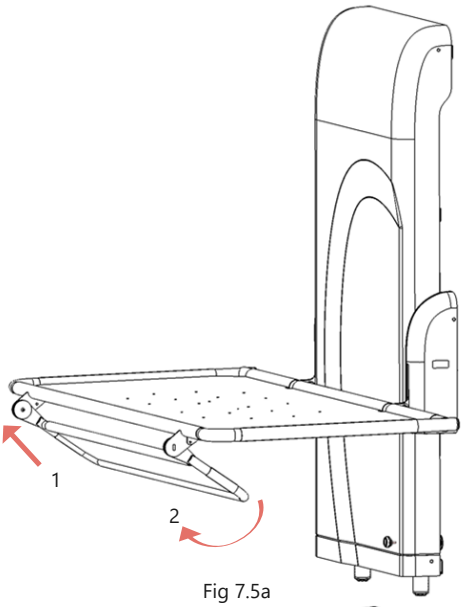

Fig 7.5a

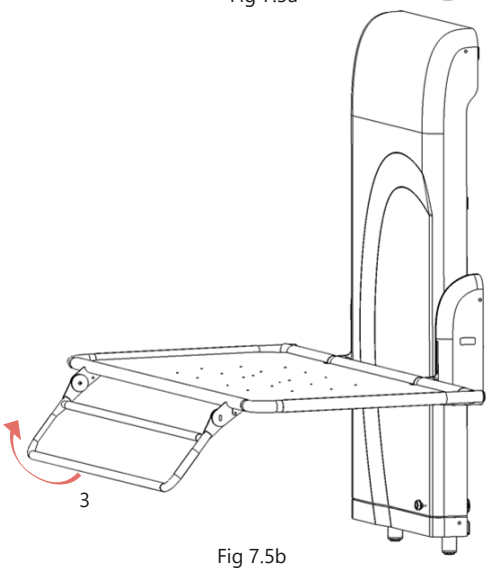

Fig 7.5b

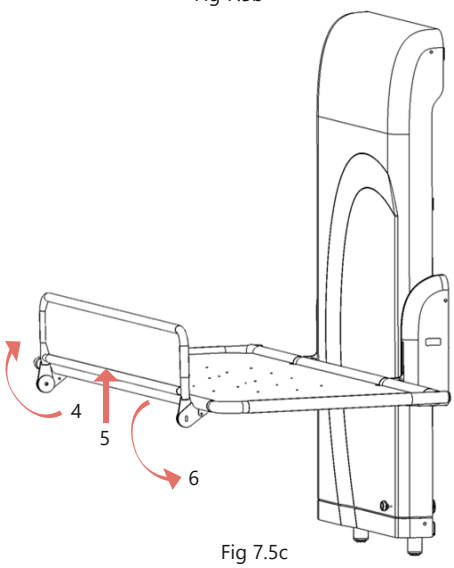

Fig 7.5c

8 Cleaning

The CTE3 changing station should be regularly cleaned and must be cleaned between users to prevent the risk of cross contamination or infection.



CAUTION: The heavy use of oil based products may adversely affect the stretcher material. Oils and other petrochemical products should be avoided and any residue removed immediately. These products include, amongst others: Baby oil and emollient creams.

- Before cleaning, try a small test first in an inconspicuous area with the cleaning agent you are proposing to use.
- The changing table may be cleaned using most mild cleaning agents or with a warm soapy water solution. The changing table should be rinsed off after cleaning and dried off with a soft cloth.
- Chemical agents, abrasive compounds and solvents must not be used, i.e. drain cleaners, acetone, oven cleaners or acids.
- Do not use an autoclave or other type of steam cleaner to clean any part of the product.
- Attention should always be paid to instruction labels for the cleaning agent.
- The main unit of the device may be cleaned with the same solution used on the stretcher.



ACTION: Ensure any cleaning product spillages are cleaned up correctly.



CAUTION: Always follow the instructions and comply with the safe use of the cleaning/disinfecting agent. Do not mix cleaning products.



CAUTION: Do not use flammable cleaning agents.



CAUTION: Do not use abrasive cloths or cleaners.



CAUTION: A dampened, non-wet cloth should be used for cleaning.



CAUTION: Do not pour or spray cleaning liquids directly onto the equipment.

9 Troubleshooting

1.	Pressing the handset results in no movement of the equipment.	➡ Check the mains electrical power is connected and switched on. Check handset is plugged in correctly.
2.	Pressing the buttons on the handset results in the machine trying to move, but fails to operate correctly.	➡ Check mains electrical power is switched on and connected.
3.	Guard will stay locked in position and/or is difficult to use.	➡ Check the mechanism for damage caused during use.
4.	Stretcher will not stay upright and/or is difficult to lift into position.	➡ The lifting gas spring has failed. Contact Astor Bannerman.

10 Technical Specification

Electrics

A.C. Input: 110 - 240 Vac, 50/60 Hz, 3.0-1.6A, 650 W Maximum
D.C. Output: 24 Vdc, 6 A Maximum
Power supply: Class I (Class II Power Supply with supplementary earth connection to frame) Internally powered when mains power is not connected
Duty cycle: 10 % maximum: 2 min use & 18 mins rest
Product weight (**Dry**)**:** 70 kg (154 lbs)
Maximum user weight: 150 kg / 330 lbs (Nivano) / 200 kg / 440 lbs (CP) / 220 kg / 485 lbs (Nivano Max)
'A' weighted sound emission: <70 dB(A)

Transport and storage

Ambient temperature range: 5 °c to 70 °c (41 °F to 158 °F)
Relative humidity range: 10 - 80 % not condensed at 20 °c (68 °F)
Atmospheric pressure range: 50 kPa to 106 kPa

Recycling

Battery: Recyclable. Not for disposal. Environmental danger
Packaging: Wood and corrugated cardboard, recyclable
The product: Electrical components, batteries, steel and plastic parts to be separated and recycled to local requirements



CAUTION: Battery module and mains cord are not routinely replaceable and are expected to last for the full service life of the product.
If replacement is required, contact Astor Bannerman.

11 Product dimensions

Note: The adjustable feet allow the installation height to be adjusted by up to 20mm (25/32”), which will allow adjustment to the operational height range. Should this adjustment not be enough, the changing table may be fully wall mounted so it can be installed further up the wall at the desired operational height.

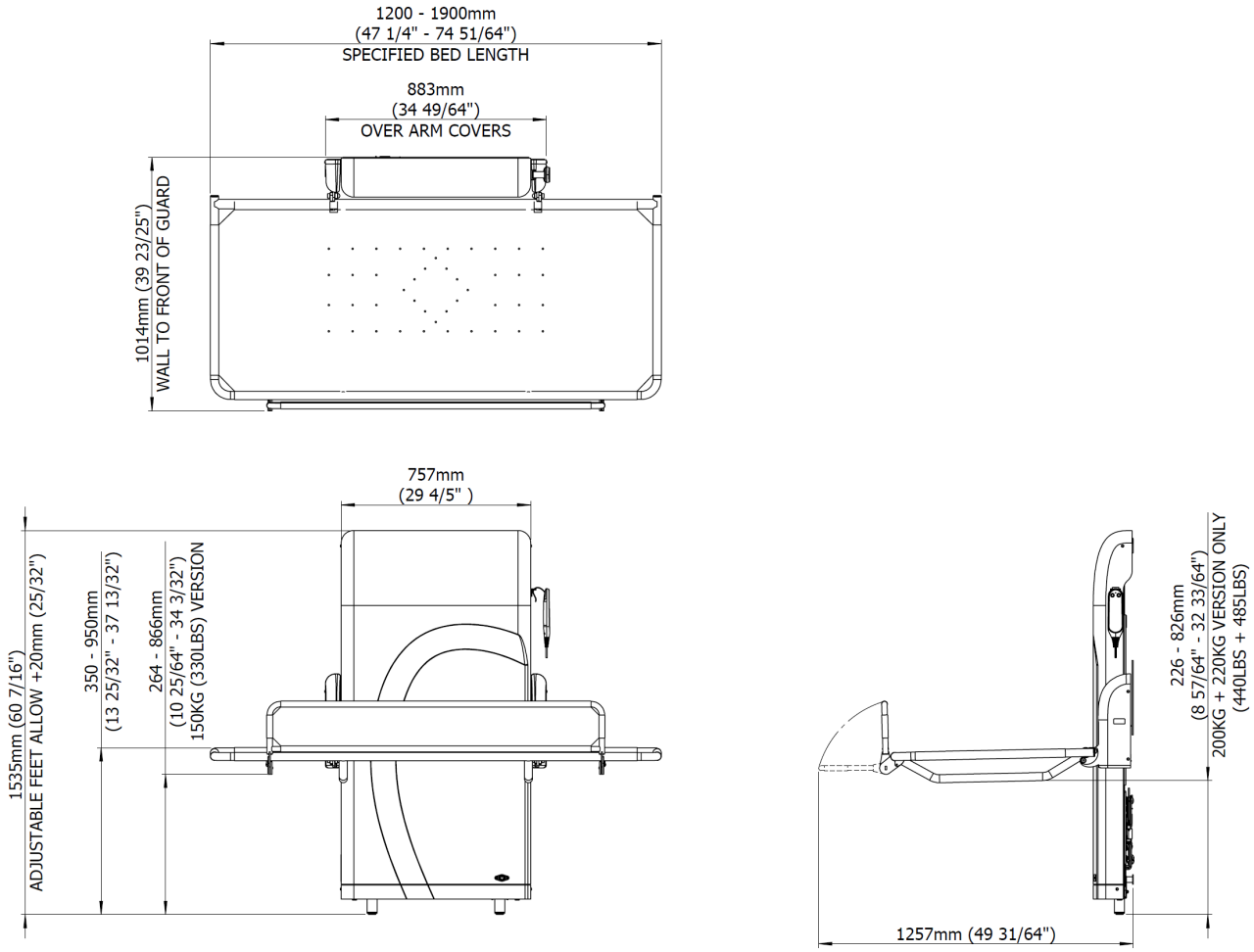

Fig 11

12 Installation

The CTE3 must be installed by a competent and qualified technician in compliance with local and national building code standards. Ensure that all pre-installation works have been carried out & checked in accordance to the Pre-install Document. An overview of the information is shown below for reference.

12.1 Pre-Installation Overview

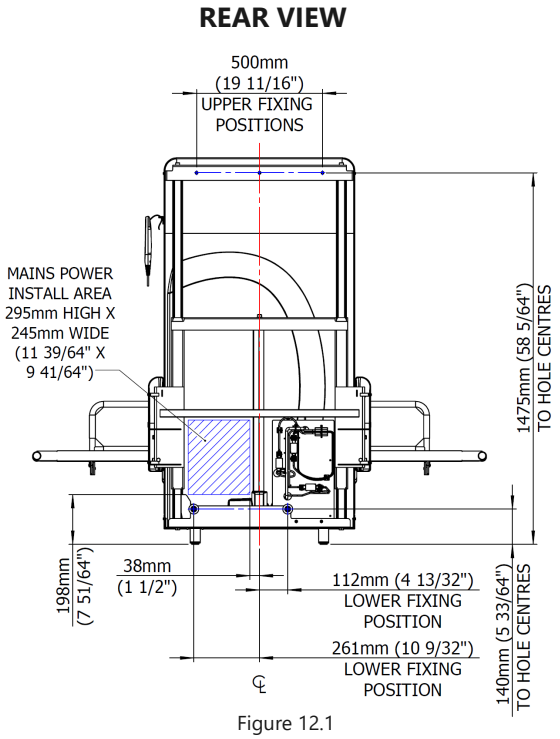

Figure 12.1

- A 230 V (110 Volt in U.S.), 1.25 kW mains supply is required through a waterproof, switched flex outlet. This must be fitted in the Mains Power Install Area (as shown in Fig 12.1).
- The CTE3 is wall-mounted and can rest on the floor or be wholly fitted to the wall.
- There should be a minimum clearance of 40 mm (1.6") at each end of the bed.
- The wall must be load bearing and strong enough to be able to bear a load of 550 kg (1212 lbs), with 110 kgs (242 lbs) on each of the wall fixings.
- The wall must be flat, plumb and free from obstructions from floor level to 1550 mm (61") above the floor, across the width of the bed length specified.
- For solid masonry construction, it is expected that a wooden frame of 50mm x 50mm (2" x 2") sections will be securely fixed to a solid load bearing concrete, brick or equivalent construction wall.
- This construction or equivalent must be faced with minimum 600 mm (23 5/8") wide, 25 mm (1") thick marine plywood which continuously extends from floor to ceiling.
- For wooden stud walls, additional framing will not be required as long as framing behind the installed unit aligns with the above statements, it must still be faced with plywood.

Please Note: The CTE3 **CANNOT** be fitted to (Gypframe) metal frame or similar type stud wall unless it has been fully reinforced with timber struts that are secured top and bottom and then reinforced with cross bracing or 25mm (1") plywood screwed in place (not nailed).

Once the wall has been prepared to the specification laid out in the Pre-installation document, the changing table may now be installed.

12.2 Connecting the battery

The product has been supplied without the battery connected.

- Looking at the rear of the product, locate the female connector, as shown in Fig 12.2a.
- Locate the male connector coming from the battery, which is mounted on the front of the electrical board.
- Make the connection by rotating the female connector clip cover and fully insert the male connector.
- The female clip cover should then easily rotate back over to secure the connection.

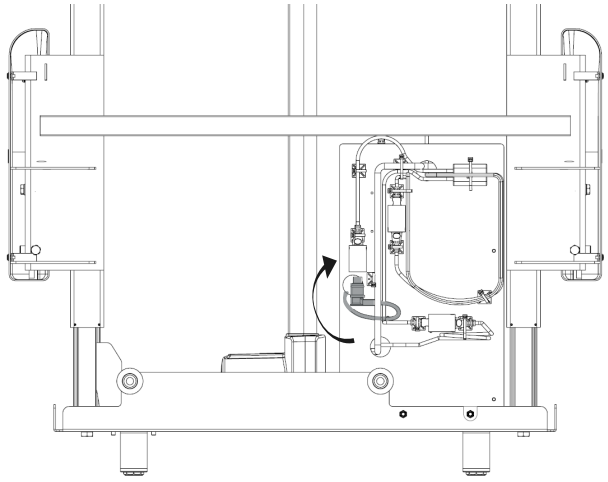

Fig 12.2a

- Tidy the cable behind the product so that it is not visible once the SBU is against the wall. Ensure it does not protrude further than any of the other cables.

Please note: The ON/OFF LED lights on the front of the battery are also control buttons and may turn the battery off if pressed.

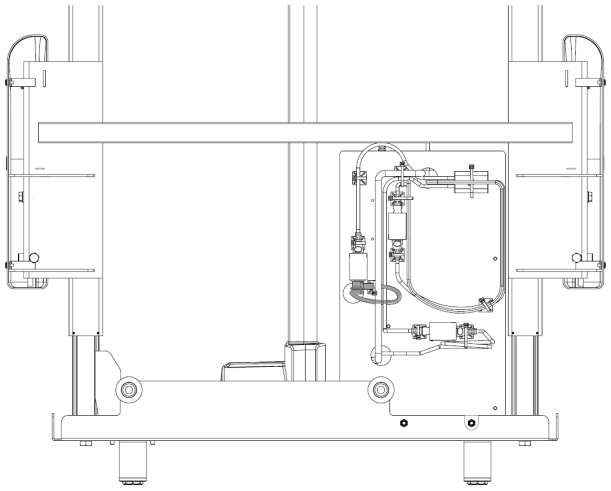

Fig 12.2b

12.3 Connecting the power outlet

WARNING: Ensure the electrical mains supply is isolated from power while connecting the product to the mains supply.

In accordance with Pre-Install, the mains power supply will be wired directly into the junction box from a waterproof flex outlet.

- Position the SBU against the wall in the approximate mounting position which will allow the mains power cable to reach the junction box and puts the flex outlet within the defined install area (Figure 12.1). Ensure it feeds behind the actuator.
- Remove the junction box cover to reveal three Wago connections on a single mount, this mount can be loosened from the box to facilitate making the connection to mains power.
- Feed the cable through one of the available ports on the junction box. Connect each of the mains power wires to the corresponding Wago terminal, ensuring that the connection is secure before replacing the mount within the terminal box.
- Replace the lid of the junction box.
- When the connection has been made from a flex outlet, ensure that there is minimal loose cable between the outlet and the junction box. If necessary, secure the cable against the wall to keep it safe from any moving parts.

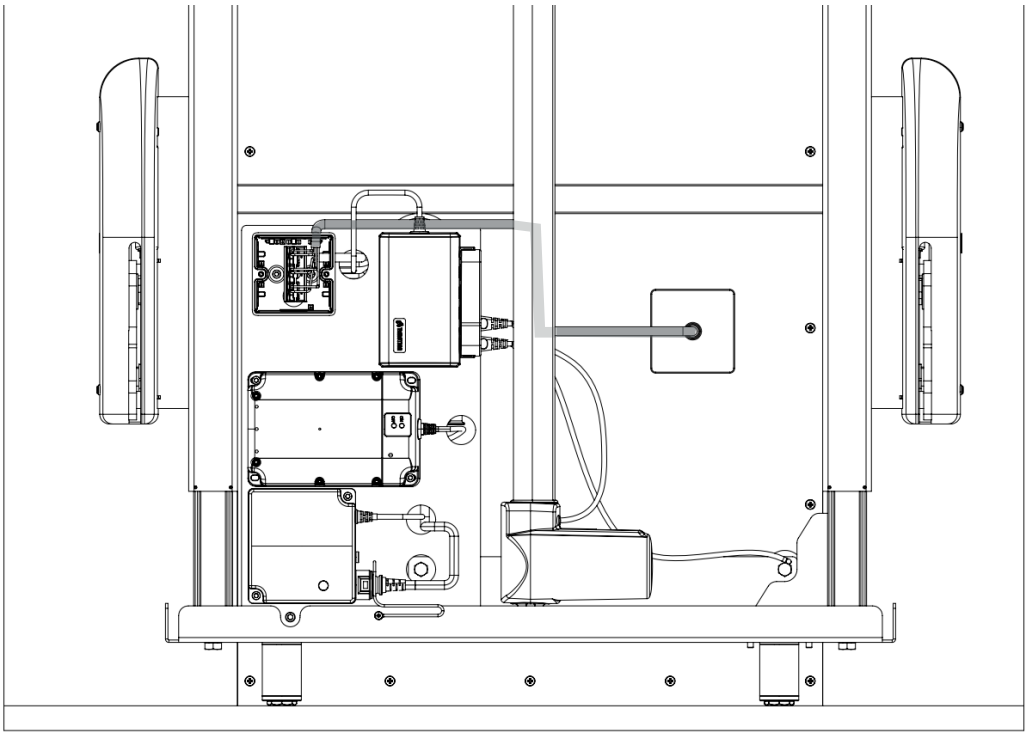

Fig 12.3

12.4 Fitting the SBU to the wall

- The wall must have been suitably prepared and reinforced as explained during the pre-installation phase.
- Align the SBU to the wall about the centerline ensuring it is level.
- If the floor is uneven, the feet can be adjusted by rotating the black plastic screw head on the bottom of the foot up to 20 mm (25/32”).
- Position the frame against the wall in the required position. Ensure there is sufficient space to accommodate not only the stretcher, but also the clearance of 40 mm (1 9/16”) at either end of the stretcher.
- With the product in place, mark out the five fixing holes, set the SBU aside and then pilot drill with a 3.5 mm (1/8”) diameter bit.

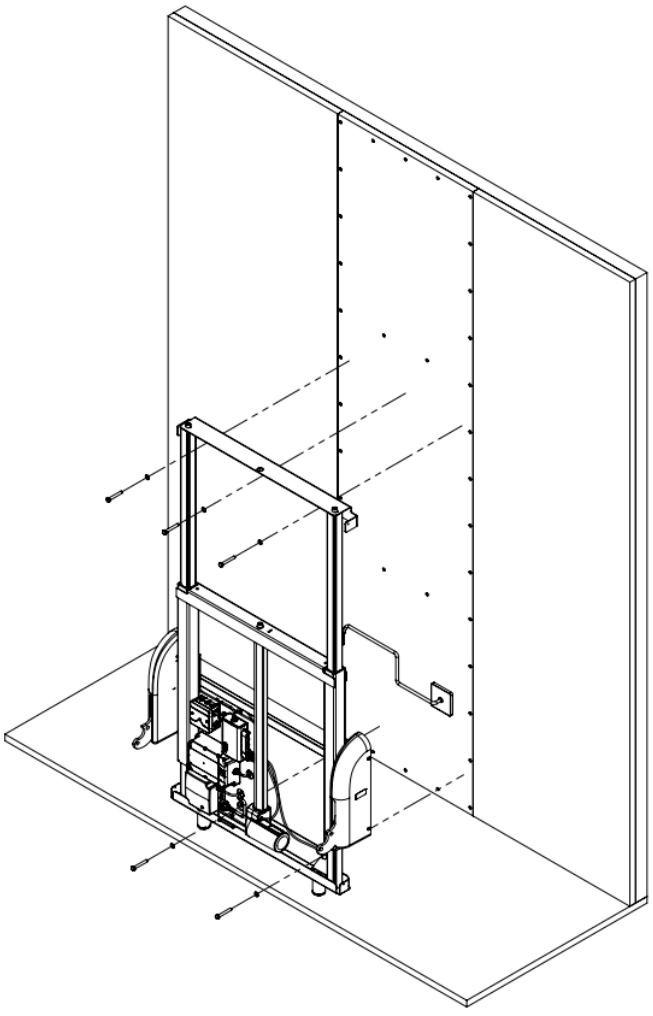

Fig 12.4a

- Reposition the frame into place.
- Using the screws and washers provided, No. 8 x 60 mm (2 23/64") coach screws, fit the top three first and then the lower two, as shown in Fig 12.4b.
- Tighten all five screws until they are flush.

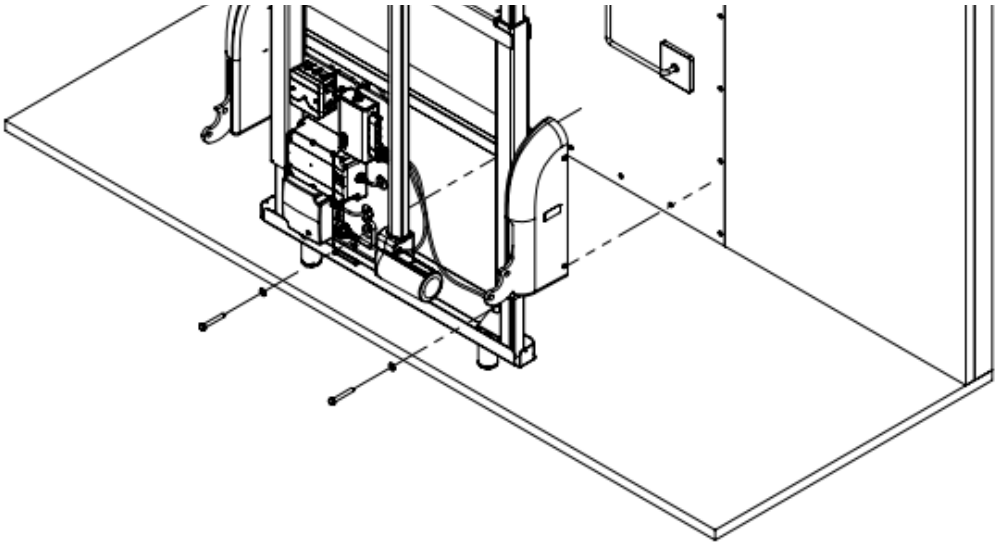

Fig 12.4b

12.5 Installing the Handset and Front Cover

- The handset will need to be unplugged to allow the cover extension cable to be fitted instead.
- To remove the handset cable, the control box connector lock will need to be removed first. This may be released from the top and rotated to unhook from the bottom, Fig 12.5a.

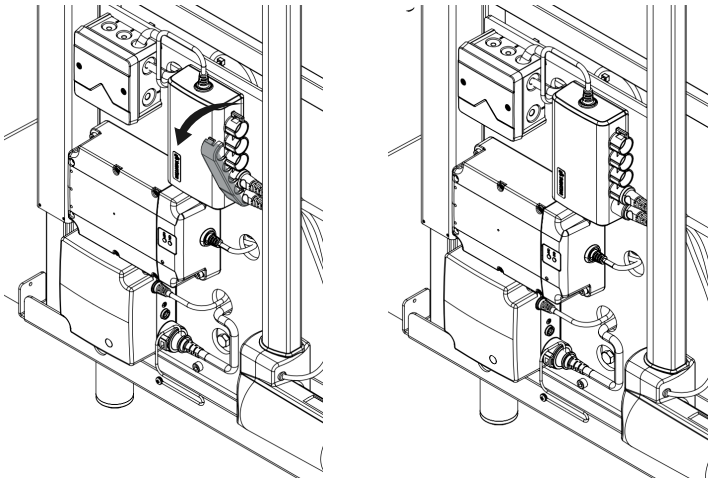

Fig 12.5a

- Remove the lowermost plug which is connected to the handset, which is shipped attached to the sliding frame.

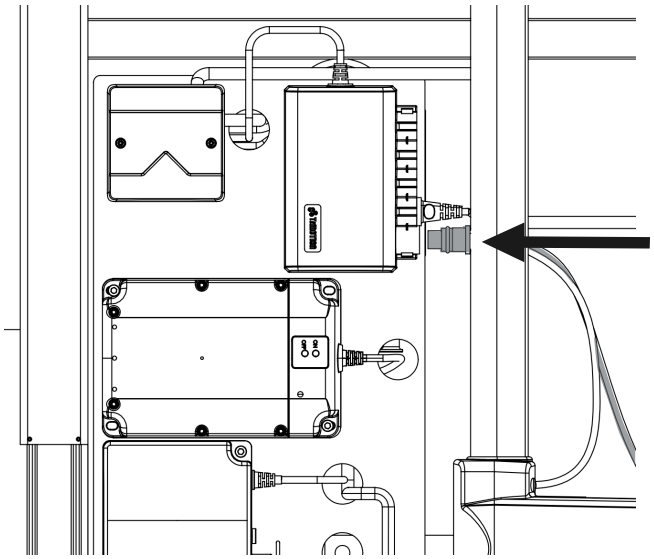

Fig 12.5b

- Locate the front cover assembly. A cable extension is fitted to the bottom right of the cover. This cable should be plugged into the port the handset was removed from.
- Ensure the cable from the cover is routed behind the actuator and plugged in fully. The connector lock should now be refitted in the same way it was removed (Fig 12.5a). This ensures the cables are held in place and cannot pull free.
- The cover may now be fitted, using the 4 plastic rivets supplied in the packing kit. There are 2 holes located at the top and 2 at the bottom, the rivets fit through the cover and into the metal frame.

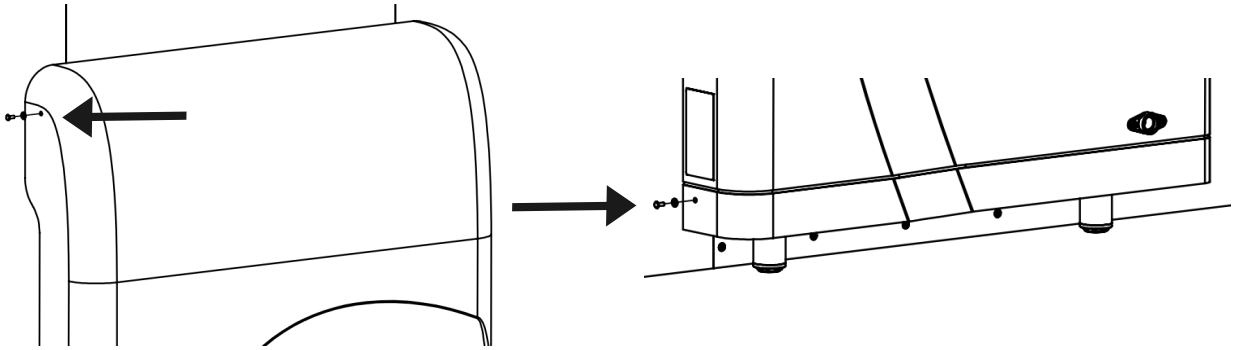

Fig 12.5c

- A Handset holder is also included in the packing kit, along with a square of 3M tape to allow it to adhere to the side of the cover.
- This should be fit high up on the right side of the cover, as shown in Fig 12.5d.

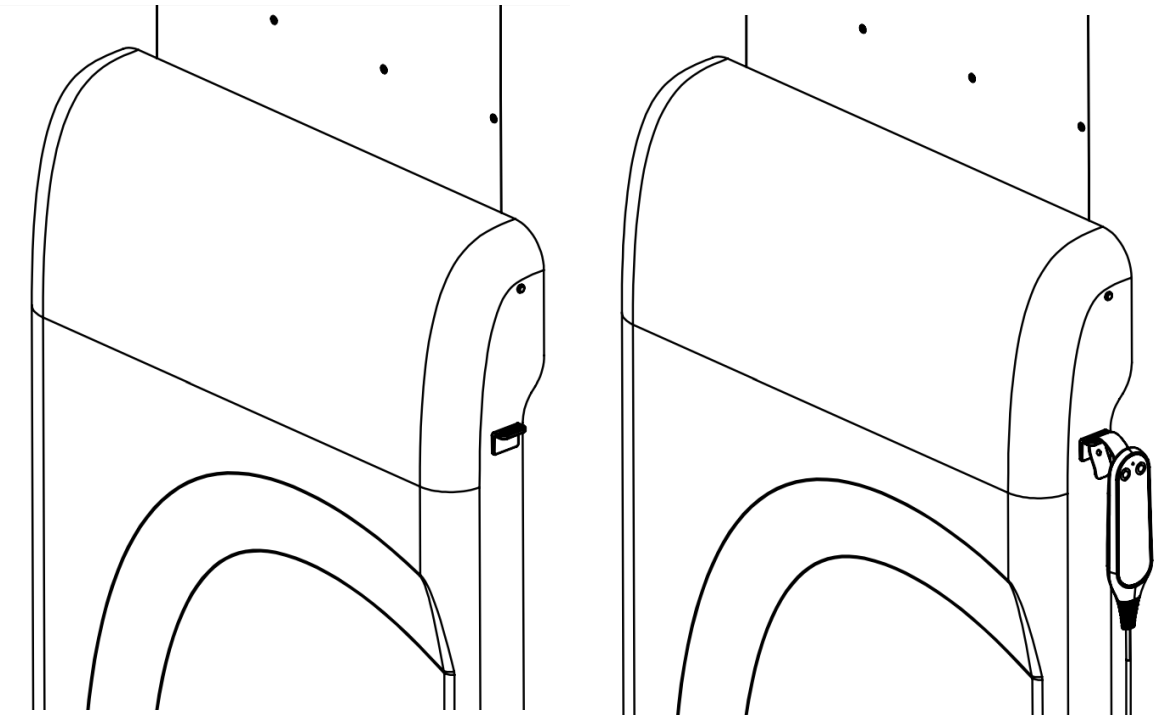

Fig 12.5d

- The handset may now be plugged in to the port at the base of the cover (Fig 12.5e) and stowed on this hook.

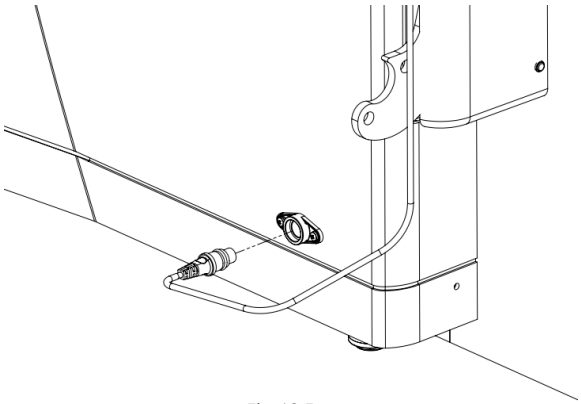

Fig 12.5e

12.6 Fit the stretcher

Note: This may require two people, one to hold the stretcher and the other to secure the fixings.

- The stretcher bed brackets fit to the outside of the SBU arm plates.
- Once in position, fit the bolts, nuts, washers and caps in the order and orientation shown below.
- Ensure the handset cable does not get caught in the brackets.

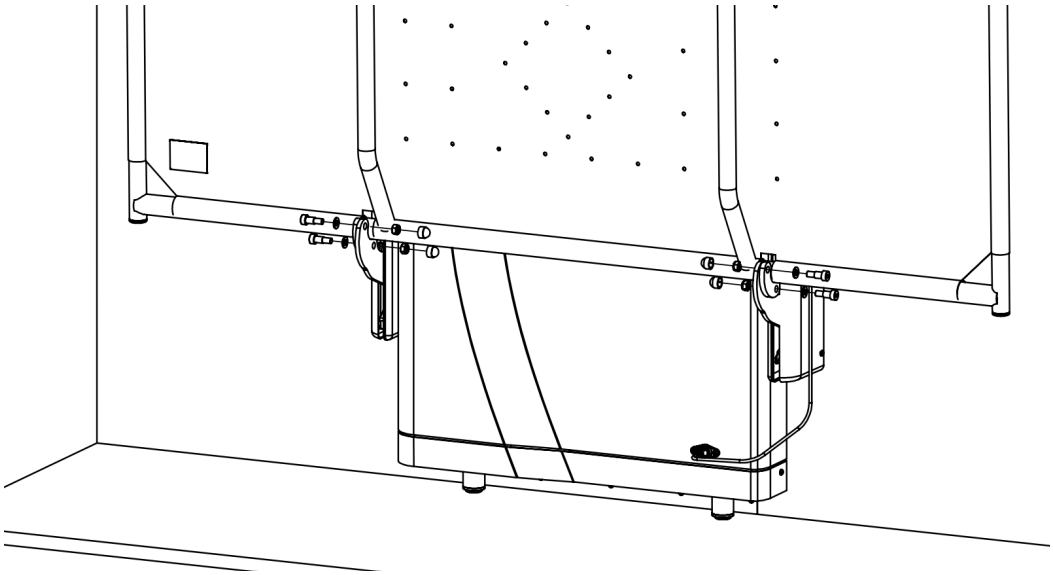

Fig 12.6

12.7 Testing

Once complete, a full function test of the product is required.

Confirm the following:

- The stretcher stows vertically and deploys correctly.
- That the stretcher rises and falls with no obstructions through the full height range.
- Apply safe working load to stretcher and complete at least 3 cycles of the full height range checking for any excess noise or incorrect movement.
- The guard stows securely and is retained by the mechanism.
- The guard locks into position when deployed.

12.8 Mounting the wall sign

The wall sign provided must be securely fixed to the wall in a clear and visible position near to the changing station.

- It is recommended that the wall sign be mounted next to the SBU.
- If your changing table is in the corner of a room, the wall sign can also be mounted on the perpendicular wall at a similar height.
- The wall sign must be clearly visible at all time. Ensure that the wall sign is not covered when the stretcher is stowed or by any other object in the room.
- Permanently fix the wall sign to your wall using appropriate fixings.

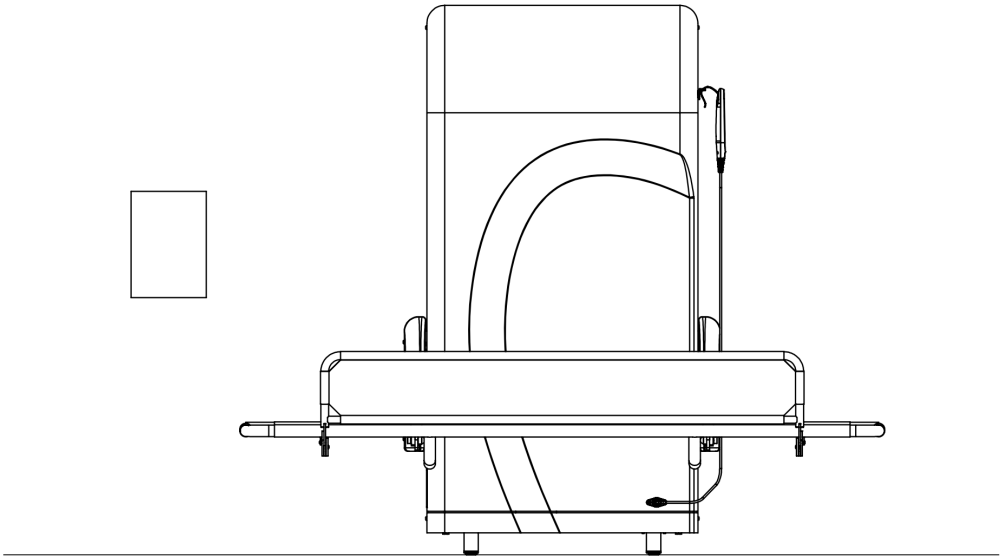

Fig 12.8

SAVE THESE INSTRUCTIONS

13 Moving & transporting the equipment

It is anticipated that once installed, the equipment will not be transported. If you need to transport this equipment after unpacking it, please contact Astor Bannerman customer services team for advice (see contact details at the end of this booklet).

14 Product disposal

- The steel frame is widely recycled.
- PVC material from the stretcher and guard can be recycled in some local authorities - please check and dispose of in accordance with state, federal and local regulations.
- The electronic components should be recycled in accordance with local WEEE regulations. For further advice, please contact Astor Bannerman:

Phone: +44 (0) 1242 820820 | **Email:** support@astorbannerman.co.uk

15 Replaceable parts

The CTE3 is supplied for use with the following parts and accessories;

- **Stretcher**
  - 1200 - 1900, 150 KG : 13.038.10.1X30
  - 1800 - 1900, 200 KG : 13.038.19.1X30
  - 1700 - 1900, 220 KG : 13.038.12.1X30
  - Ratchet, LH, 1700 - 1900 : 13.038.20.1X30
  - Ratchet, RH, 1700 - 1900 : 13.038.20.1X31
- **Guard Assembly**
  - 1200 - 1500 : 00.084.56.1202
  - 1600 - 1900 : 00.084.56.1602
- **Guard Bumper**
  - 1200 - 1500 : 20.085.10.0008
  - 1600 - 1900 : 20.085.10.0009
- **Handset** - 2 Button : 20.038.09.0001

There are no detachable items as part of this product.

There are various parts of the product that may be replaced in the event of any failure or damage. In the event of any component failures or damage please contact us for advice;

Phone: +44 (0) 1242 820820 | **Email:** sales@astorbannerman.co.uk

16.1 Standard Symbols

This product is CE-marked and is certified to appropriate standards for this type of device

This product is UKCA Marked and is certified to appropriate standards for this type of device

REF Astor Bannerman product reference number.

SN Astor Bannerman product serial number.

FOLLOW INSTALLATION & USER GUIDE: Before installing or using this equipment you must read and fully understand these instructions. Failure to comply with these instructions may result in accidents resulting in serious personal injury or the product being damaged.

CAUTION: To indicate that caution is necessary when operating the device or control close to where the symbol is placed, or to indicate that the current situation needs operator awareness or operator action to avoid undesirable consequences.

WARNING: This symbol indicates a hazardous situation which could result in serious injury or even death if not avoided.

WARNING: This symbol indicated a hazard relating to electricity/voltage.

This product has a duty cycle of 2 minutes ON and 18 minutes OFF.

This product is for indoor use only.

ACTION: This sign is used to highlight a mandatory action that must be followed by the user.

Pb Battery contains lead

16 Appendix


To signify a prohibited action.


Identify any terminal which is intended for connection to an external conductor for protection against electric shock in case of a fault, or the terminal of a protective earth (ground) electrode.


Parts of this product can be recycled.


Parts of this product must be separated when being disposed of.


Details of product manufacturer


Symbol indicated the date of manufacture.

IPX4 This product has been tested for water ingress in accordance with IPX4.


Maximum working load


Lifting range


Class I electronic protection.


Product Safety Electrical Appliance & Material recognised component.


C-Tick marked component.


This symbol indicates a hazard associated with EMC (Electromagnetic Compatibility).


Astor Bannerman products are proudly made in Britain.

17 Service Record

Service Engineers Name	Date of Service	Actions Undertaken	Signature

18 Training Record

Trainee's Name	Date of Training	Type of Training	Trainee's Signature	Trainer's Signature



Specialist Bathing | Patient Handling | Changing & Showering

Astor Bannerman The Elephant Works, Andoversford Link, Cheltenham GL54 4LB
Phone: +44 (0) 1242 820820 | **Website:** www.astorbannerman.co.uk
Email: sales@astorbannerman.co.uk | support@astorbannerman.co.uk

astor bannerman
beyond routine

© 2024 Astor-Bannerman (Medical) Limited.

50.038.08.0004 (Rev5)