Product Specification Sheet:

astor bannerman
beyond routine

Astor CTE3 Nivano Wall Mounted Changing & Showering Table



Highlights:

- Height adjustable to give safe and comfortable carer working height
- Suitable for use in shower areas and wet rooms
- Durable non-rip high tension vinyl stretcher - comfortable and easy to clean
- Front guard for added safety
- 150 kg MWL
- 220 kg MWL option - **CTE3 Nivano Max**



A popular choice among families and Occupational Therapists for many years, the CTE Nivano has been known to be comfortable and reliable. It is simple to operate from a handset control and comes in a range of sizes from 1200 mm up to 1900 mm to suit both paediatric and adult applications.

The durable stretcher material is comfortable as well as quick and easy to clean, saving precious time. This, along with part stainless steel construction gives many years of worry free use, even in wet and humid or multi-user environments, especially when combined with ongoing maintenance for extra peace of mind.

The 600 mm travel range enables the user to be gently lifted to a safe and comfortable working height for washing, showering, changing and dressing. The platform stows neatly when not in use, held in place with twin gas struts, and features battery back-up for safe lowering in the event of a power failure.

The front guard is integrated for added safety, and can be easily folded away.

The CTE3 Nivano can be tailored for you with the addition of optional extras adding comfort, convenience and unique customisation.

Standard Features:

- MWL 150 kg/24 st
- Height range 300mm - 900mm (600mm)
- Height adjustable (mains electric)
- Foldaway safety front guard
- Handset operation
- Battery backup
- Floor and ceiling hoist access
- Part stainless steel construction
- Durable non-rip high tension vinyl stretcher
- Protrudes just 242 mm from wall when stowed
- 3 Year warranty *(Terms and conditions apply)*

Optional Extras:

- Stretcher sizes from 1200-1900 x 700 mm
- MWL 220 kg/35 st (1700-1900 models)
- Protective padded guard bumper
- Anti-splash skirt
- Tilting head/backrest (1700-1900 models)
- Protective foam wedge support
- Removable mattress
- Special fully coloured models available
- Range of service & maintenance packages:

Product Specification Sheet:

Astor CTE3 Nivano Changing & Showering Table

Model Name:	**Astor CTE3 Nivano (150 kg) / Astor CTE3 Nivano Max (220 kg)**
Product Description	Wall mounted changing and showering table
Product Codes	150 kg MWL: 00.038.11.1230 - 00.038.11.1930 (1200-1900 mm) With backrest: R: 00.038.20.1730/1830/1930 L: 00.038.20.1731/1831/1931 220 kg MWL: 00.038.12.1730 - 00.038.12.1930 (1700-1900 mm)
Mattress Size	150 kg MWL: 1000 mm - 1900 mm x 700 mm 220 kg MWL: 1700 mm - 1900 mm x 700 mm
Height Range	300 mm - 900 mm x 700 mm (600 mm)

Features:

Height Adjustable | Mains Electric | Battery Backup | 150kg/24st MWL | 3 Year Warranty

Options:

Battery Model | 1000 - 1900mm | 220kg/35st MWL | Tilting Head/ Backrest | Service Packages | Many More Options

Application:

Private Home | School | Leisure Centre | Care Home | Nursing Home | Respite Home | Hospital | Changing Places

Technical Drawings:

All dimensions in mm:

REAR VIEW

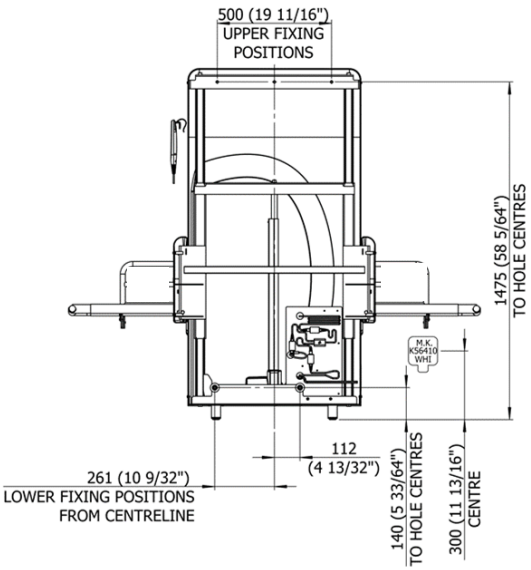

FRONT VIEW

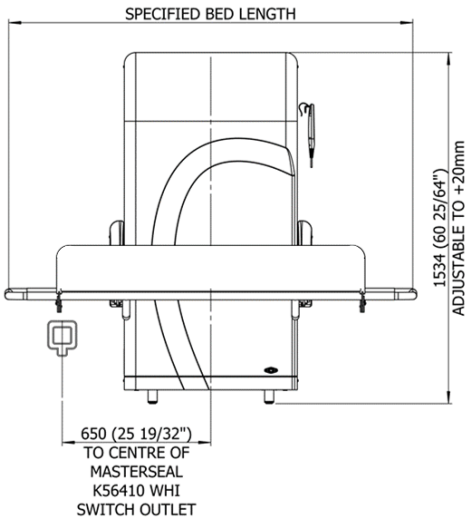

SIDE VIEW

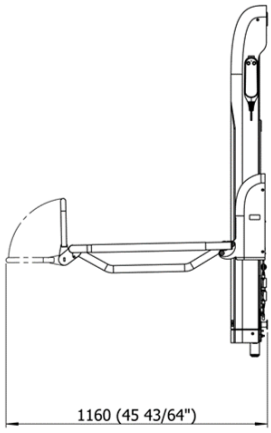

Astor Bannerman, The Elephant Works, Andoversford Link, Cheltenham GL54 4LB
sales@astorbannerman.co.uk **01242 820820** www.astorbannerman.co.uk